Key: **527**

Town of BREWSTER - Fiscal Year 2025

9/17/2024 2:15 pm SEQ #: 544

LEGAL

CURRENT OWNER	PARCEL ID	LOCATION
EATON RICHARD G **609 MISSISSIPPI AVENUE** **SILVER SPRING, MD 20910**	**68-15-0**	**22 BARBERRY LANE**

TRANSFER HISTORY	DOS	T	SALE PRICE	BK-PG (Cert)
EATON RICHARD G	05/01/2018	DC		(57343)
EATON RICHARD G & DUREE H	09/16/1980	XX	25,500	(57343)

CLASS	CLASS%	DESCRIPTION	BN ID	BN	CARD
1010	**100**	**SINGLE FAMILY**		**1**	**1 of 1**

PMT NO	PMT DT	TY	DESC	AMOUNT	INSP	BY	1st	%
11	01/07/2022	7	ALTERATIONS	17,000	02/23/2023	TCK	100	100
		14	CYCLICAL GRO		10/15/2020	NF	100	100
826	10/08/2014	7	ALTERATIONS	75,000	06/08/2015	MW	100	100
353	05/01/2014	7	ALTERATIONS	3,700	06/08/2015	MW	100	100
680	12/03/1997	2	ADD	65,000	06/17/1998	BC	100	100

LAND

CD	T	AC/SF/UN	Nbhd	St Ind	Infl	ADJ BASE	SAF	Topo	Lpi	VC	CREDIT AMT	ADJ VALUE
100	S	31,363	4 1.00	4-B 1.00	A 1.00	1,139,840	1.56	A 1.00	BGD 5.20			1,281,980

TOTAL	31,363 SF	ZONING	RM	FRNT	0
Nbhd	NBHD 4	NOTE	RELEASE OF INTEREST IN ROAD AND FOOTPATHS		
St Ind	KINGS GRANT		ON SUBDIVISION PLAN 13115-D -- LCC# 82869		
Infl	AVERAGE		9/16/80		

ASSESSED	CURRENT	PREVIOUS
LAND	1,282,000	1,209,500
BUILDING	744,400	712,100
DETACHED	0	0
OTHER	0	0
TOTAL	**2,026,400**	**1,921,600**

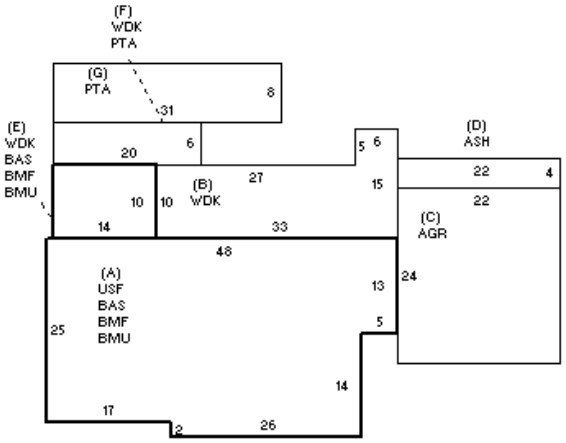

DETACHED

TY	QUAL	COND	DIM/NOTE	YB	UNITS	ADJ PRICE	RCNLD

PHOTO 02/23/2023

BLDG COMMENTS

BUILDING

BUILDING	CD	ADJ	DESC
MODEL	1		RESIDENTIAL
STYLE	4	1.02	CAPE [100%]
QUALITY	G	1.30	GOOD [100%]
FRAME	1	1.00	WD FRAME [100%]

MEASURE	10/15/2020	NF
LIST	9/12/2007	RJM
REVIEW	3/27/2023	EMZ

YEAR BLT	1976	SIZE ADJ	0.990
NET AREA	2,524	DETAIL ADJ	1.000
$NLA(RCN)	$383	OVERALL	1.030

CAPACITY	UNITS	ADJ
STORIES	1.75	1.00
ROOMS	6	1.00
BEDROOMS	3	1.00
BATHROOMS	3	1.00
FIXTURES	9	$15,666
GARAGE SPACES	0	1.00
% BSMT FIN	0	1.00
# 1/2 BATHS	0	1.00
# OF UNITS	1	1.00

ELEMENT	CD	DESCRIPTION	ADJ
FOUNDATION	4	FLR & WALL	1.00
EXT COVER	1	WD SHINGLE	1.00
ROOF SHAPE	1	GABLE	1.00
ROOF COVER	1	ASPH/CMP SH	1.00
FLOOR COVER	1	HARDWOOD	1.00
INT FINISH	2	DRYWALL	1.00
HEATING/COOL	16	FHA+DCTLS AC	1.01
FUEL SOURCE	1	OIL	1.00

S	BAT	T	DESCRIPTION	UNITS	YB	ADJ PRICE	RCN
+	BMU	N	BSMT UNFINISHED	1,332		72.03	95,948
+	BMF	N	BSMT FINISH	1,332		43.46	57,893
+	BAS	L	BASE AREA	1,332	1976	326.76	435,248
A	USF	L	UPPER STORY FIN	1,192	1976	233.76	278,646
+	WDK	N	WOOD DECK	620		51.96	32,218
C	AGR	N	ATT GARAGE	528		51.42	27,150
D	ASH	N	ATT SHED	88		37.09	3,264
F	PTA	N	PATIO	120		21.08	2,529
G	PTA	N	PATIO	248		18.97	4,705
	F21	O	FPL 2S 1OP	1		13,456.30	13,456

TOTAL RCN	966,723

CONDITION ELEM	CD
EXTERIOR	V
INTERIOR	G
KITCHEN	A
BATHS	A
HEAT/ELEC	A

EFF.YR/AGE	1987 / 36		
COND	23	23 %	
FUNC	0		
ECON	0		
DEPR	23	% GD	77
RCNLD			$744,400