Key: 5467

Town of BREWSTER - Fiscal Year 2025

9/17/2024 2:15 pm SEQ #: 5,684

LEGAL

CURRENT OWNER	PARCEL ID	LOCATION
SMOLLER BLAINE H & SUZANNE M **626 MILLSTONE ROAD** **BREWSTER, MA 02631**	**98-19-0**	**626 MILLSTONE ROAD**

TRANSFER HISTORY	DOS	T	SALE PRICE	BK-PG (Cert)
SMOLLER BLAINE H & SUZANN	09/30/1993	QS	80,000	8808-204

CLASS	CLASS%	DESCRIPTION	BN ID	BN	CARD
1010	**100**	**SINGLE FAMILY**		**1**	**1 of 1**

PMT NO	PMT DT	TY	DESC	AMOUNT	INSP	BY	1st	%
312	04/19/2016	7	ALTERATIONS	10,625	04/04/2017	NF	100	100
		12	CYCLICAL NON		01/05/2011	JH	100	100
519	10/19/2010	7	ALTERATIONS	5,000	01/05/2011	JH	100	100
		12	CYCLICAL NON		12/01/2003	TG	100	100
110	03/05/1999	7	ALTERATIONS	40,000	03/08/2000	LB	100	100

LAND

CD	T	AC/SF/UN	Nbhd	St Ind	Infl	ADJ BASE	SAF	Topo	Lpi	VC	CREDIT AMT	ADJ VALUE
100	S	17,800	13 1.00	A 1.00	A 1.00	197,280	2.44	A 1.00	RM2 0.90			196,350

TOTAL	17,800 SF	ZONING	RL	FRNT	0
Nbhd	NBHD 13	NOTE			
St Ind	AVERAGE				
Infl	AVERAGE				

ASSESSED	CURRENT	PREVIOUS
LAND	196,400	185,300
BUILDING	457,200	438,000
DETACHED	5,000	5,000
OTHER	0	0
TOTAL	**658,600**	**628,300**

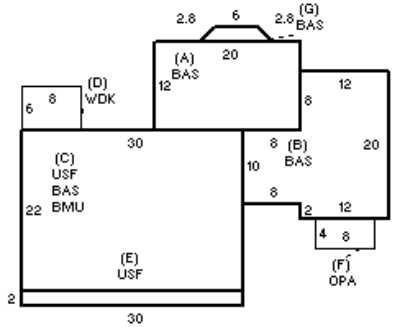

DETACHED

TY	QUAL	COND	DIM/NOTE	YB	UNITS	ADJ PRICE	RCNLD
SHF	A 1.00	20 0.80	7X21		147	21.39	2,500
PTD	A 1.00	20 0.80	20 X 22	2000	440	7.20	2,500

PHOTO 04/20/2022

BUILDING

BUILDING	CD	ADJ	DESC
MODEL	1		RESIDENTIAL
STYLE	5	1.05	COLONIAL [100%]
QUALITY	A+	1.20	AVG + [100%]
FRAME	1	1.00	WD FRAME [100%]

MEASURE	1/7/2021	TCK
LIST	1/7/2021	EST
REVIEW	2/17/2021	MR

BLDG COMMENTS

HOUSE MOVED TO SITE1985, BUILT IN 1947.
INFO @ DOOR (1/7/21)

YEAR BLT	1947	SIZE ADJ	1.000
NET AREA	1,956	DETAIL ADJ	1.000
$NLA(RCN)	$339	OVERALL	1.100

CAPACITY	UNITS	ADJ
STORIES	2	1.00
ROOMS	6	1.00
BEDROOMS	3	1.00
BATHROOMS	2	1.00
FIXTURES	6	$10,296
GARAGE SPACES	0	1.00
% BSMT FIN	0	1.00
# 1/2 BATHS	0	1.00
# OF UNITS	1	1.00

ELEMENT	CD	DESCRIPTION	ADJ
FOUNDATION	4	FLR & WALL	1.00
EXT COVER	4	VINYL	1.00
ROOF SHAPE	1	GABLE	1.00
ROOF COVER	1	ASPH/CMP SH	1.00
FLOOR COVER	1	HARDWOOD	1.00
INT FINISH	2	DRYWALL	1.00
HEATING/COOL	11	HTWT/CL AIR	1.05
FUEL SOURCE	1	OIL	1.00

S	BAT	T	DESCRIPTION	UNITS	YB	ADJ PRICE	RCN
+	BAS	L	BASE AREA	576	1986	325.38	187,419
C	BMU	N	BSMT UNFINISHED	660		82.24	54,280
C	BAS	L	BASE AREA	660	1947	325.38	214,751
C	USF	L	UPPER STORY FIN	660	1947	242.68	160,169
D	WDK	N	WOOD DECK	48		51.75	2,484
E	USF	L	UPPER STORY FIN	60	1986	242.68	14,561
F	OPA	N	OPEN PORCH	32		66.00	2,112
	F21	O	FPL 2S 1OP	1		13,399.30	13,399
	ODS	O	OUTDOOR SHOWER	1		3,187.80	3,188

TOTAL RCN	662,658

CONDITION ELEM	CD
EXTERIOR	G
INTERIOR	A
KITCHEN	G
BATHS	G
HEAT/ELEC	A

EFF.YR/AGE	1971 / 52		
COND	31	31 %	
FUNC	0		
ECON	0		
DEPR	31	% GD	69
RCNLD			$457,200