Key: 5610

Town of BREWSTER - Fiscal Year 2025

9/17/2024 2:15 pm SEQ #: 5,830

LEGAL

CURRENT OWNER	PARCEL ID	LOCATION
MONAGHAN RICHARD B TRUSTEE C/O MONAGHAN MELISSA B TRUSTEE 446 APPLETON STREET ARLINGTON, MA 02476	74-6-0	200 SHEEP POND DRIVE

TRANSFER HISTORY	DOS	T	SALE PRICE	BK-PG (Cert)
MONAGHAN MELISSA B TRUSTE	05/22/2024	F	1	36378-16
MONAGHAN MELISSA B	05/22/2024	H	1	36378-13
MONAGHAN RICHARD B TRUSTE	10/19/1994	F	100	9411-153

CLASS	CLASS%	DESCRIPTION	BN ID	BN	CARD
1010	100	SINGLE FAMILY		1	1 of 1

PMT NO	PMT DT	TY	DESC	AMOUNT	INSP	BY	1st	%
734	10/01/2012	7	ALTERATIONS	20,000	01/18/2013	SF	100	100
330	05/12/2012	7	ALTERATIONS	18,000	01/18/2013	SF	100	100
NP		12	CYCLICAL NON		11/11/2011	MR	100	100
		12	CYCLICAL NON		03/02/2004	JB	100	100
556	09/19/2002	3	OUT BUILDING	5,000			100	100

LAND

CD	T	AC/SF/UN	Nbhd	St Ind	Infl	ADJ BASE	SAF	Topo	Lpi	VC	CREDIT AMT	ADJ VALUE
100	S	28,300	15 1.00	15A 1.00	A 1.00	712,400	1.69	A 1.00	PF6 3.25			781,490

TOTAL	28,300 SF	ZONING	RM	FRNT	0

Nbhd	NBHD 15
St Ind	SHEEP POND EST.
Infl	AVERAGE

NOTE

ASSESSED	CURRENT	PREVIOUS
LAND	781,500	737,300
BUILDING	400,000	383,200
DETACHED	12,300	12,100
OTHER	0	0
TOTAL	**1,193,800**	**1,132,600**

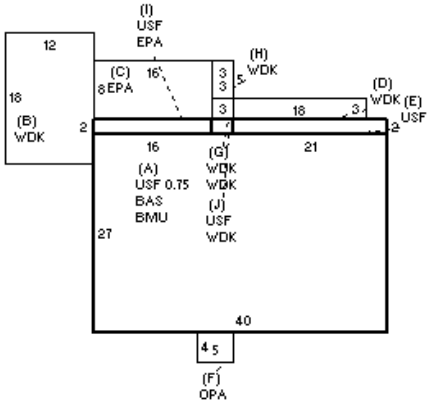

DETACHED

TY	QUAL	COND	DIM/NOTE	YB	UNITS	ADJ PRICE	RCNLD
DGF	A 1.00	20 0.80	20X20		400	31.80	10,200
SHF	A 1.00	20 0.80	10X12	2003	120	21.39	2,100

PHOTO 03/06/2021

BLDG COMMENTS

GENERATOR

BUILDING

BUILDING	CD	ADJ	DESC
MODEL	1		RESIDENTIAL
STYLE	4	1.02	CAPE [100%]
QUALITY	A	1.00	AVG [100%]
FRAME	1	1.00	WD FRAME [100%]

MEASURE	3/6/2021	NF
LIST	3/6/2021	EST
REVIEW	11/8/2021	EMZ

YEAR BLT	1968	SIZE ADJ	1.000
NET AREA	1,970	DETAIL ADJ	1.000
$NLA(RCN)	$294	OVERALL	1.050

CAPACITY	UNITS	ADJ
STORIES	1.75	1.00
ROOMS	6	1.00
BEDROOMS	3	1.00
BATHROOMS	2	1.00
FIXTURES	7	$9,555
GARAGE SPACES	0	1.00
% BSMT FIN	0	1.00
# 1/2 BATHS	0	1.00
# OF UNITS	1	1.00

ELEMENT	CD	DESCRIPTION	ADJ
FOUNDATION	4	FLR & WALL	1.00
EXT COVER	1	WD SHINGLE	1.00
ROOF SHAPE	1	GABLE	1.00
ROOF COVER	1	ASPH/CMP SH	1.00
FLOOR COVER	1	HARDWOOD	1.00
INT FINISH	2	DRYWALL	1.00
HEATING/COOL	9	WARM/CL AIR	1.03
FUEL SOURCE	2	GAS	1.00

S	BAT	T	DESCRIPTION	UNITS	YB	ADJ PRICE	RCN
A	BMU	N	BSMT UNFINISHED	1,080		59.29	64,029
A	BAS	L	BASE AREA	1,080	1968	274.35	296,303
+	WDK	N	WOOD DECK	309		41.16	12,719
+	EPA	N	ENCLOSED PORCH	160		80.30	12,848
+	USF	L	UPPER STORY FIN	890	1968	191.07	170,053
F	OPA	N	OPEN PORCH	20		52.50	1,050
	F21	O	FPL 2S 1OP	1		10,658.60	10,659
	ODS	O	OUTDOOR SHOWER	1		2,535.80	2,536

TOTAL RCN	579,750

CONDITION ELEM	CD
EXTERIOR	G
INTERIOR	A
KITCHEN	A
BATHS	A
HEAT/ELEC	A

EFF.YR/AGE	1971 / 52	
COND	31	31 %
FUNC	0	
ECON	0	
DEPR	31	% GD 69
RCNLD		$400,000