Key: 5691

Town of BREWSTER - Fiscal Year 2025

9/17/2024 2:15 pm SEQ #: 5,909

LEGAL

CURRENT OWNER	PARCEL ID	LOCATION
HASSON BARBARA L 15 CAMBRIDGE DRIVE HERSHEY, PA 17033	85-4-0	395 SHEEP POND DRIVE

TRANSFER HISTORY	DOS	T	SALE PRICE	BK-PG (Cert)
HASSON BARBARA L	09/27/1995	QS	38,000	9860-129

CLASS	CLASS%	DESCRIPTION	BN ID	BN	CARD
1010	100	SINGLE FAMILY		1	1 of 1

PMT NO	PMT DT	TY	DESC	AMOUNT	INSP	BY	1st	%
80	01/31/2007	1	NEW CONSTRUC	399,940	03/26/2009	JH	100	100

LAND

CD	T	AC/SF/UN	Nbhd	St Ind	Infl	ADJ BASE	SAF	Topo	Lpi	VC	CREDIT AMT	ADJ VALUE
100	S	14,810	15 1.00	15A 1.00	A 1.00	328,800	2.85	A 1.00	R04 1.50			318,380

TOTAL	14,810 SF	ZONING	RM	FRNT	0
Nbhd	NBHD 15	NOTE			
St Ind	SHEEP POND EST.				
Infl	AVERAGE				

ASSESSED	CURRENT	PREVIOUS
LAND	318,400	300,400
BUILDING	703,900	664,700
DETACHED	0	0
OTHER	0	0
TOTAL	**1,022,300**	**965,100**

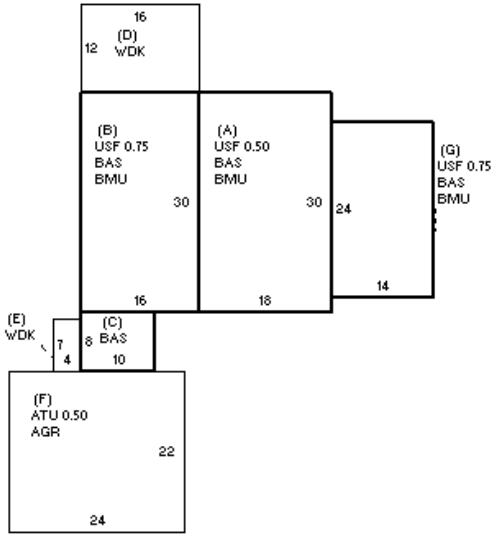

DETACHED

TY	QUAL	COND	DIM/NOTE	YB	UNITS	ADJ PRICE	RCNLD

PHOTO 03/09/2021

BLDG COMMENTS

BUILDING

BUILDING	CD	ADJ	DESC
MODEL	1		RESIDENTIAL
STYLE	4	1.02	CAPE [100%]
QUALITY	A+	1.20	AVG + [100%]
FRAME	1	1.00	WD FRAME [100%]

MEASURE	3/9/2021	NF
LIST	3/9/2021	EST
REVIEW	11/9/2021	EMZ

YEAR BLT	2007	SIZE ADJ	1.000
NET AREA	2,318	DETAIL ADJ	1.000
$NLA(RCN)	$349	OVERALL	1.050

CAPACITY	UNITS	ADJ
STORIES	1.5	1.00
ROOMS	7	1.00
BEDROOMS	3	1.00
BATHROOMS	2	1.00
FIXTURES	8	$13,104
GARAGE SPACES	2	1.00
% BSMT FIN	0	1.00
# 1/2 BATHS	1	1.00
# OF UNITS	1	1.00

ELEMENT	CD	DESCRIPTION	ADJ
FOUNDATION	4	FLR & WALL	1.00
EXT COVER	1	WD SHINGLE	1.00
ROOF SHAPE	1	GABLE	1.00
ROOF COVER	1	ASPH/CMP SH	1.00
FLOOR COVER	1	HARDWOOD	1.00
INT FINISH	1	PLASTER	1.00
HEATING/COOL	9	WARM/CL AIR	1.03
FUEL SOURCE	2	GAS	1.00

S	BAT	T	DESCRIPTION	UNITS	YB	ADJ PRICE	RCN
+	BMU	N	BSMT UNFINISHED	1,356		68.47	92,842
+	USF	L	UPPER STORY FIN	882	2007	229.28	202,229
+	BAS	L	BASE AREA	1,436	2007	304.38	437,088
+	WDK	N	WOOD DECK	220		49.39	10,866
F	AGR	N	ATT GARAGE	528		48.88	25,806
F	ATU	N	ATTIC UNF	264		67.29	17,764
	MST	O	MAS/METAL STACK	1		6,334.00	6,334
	ODS	O	OUTDOOR SHOWER	1		3,042.90	3,043

TOTAL RCN	809,075

CONDITION ELEM	CD
EXTERIOR	A
INTERIOR	A
KITCHEN	A
BATHS	A
HEAT/ELEC	A

EFF.YR/AGE	2007 / 16	
COND	13	13 %
FUNC	0	
ECON	0	
DEPR	13	% GD 87
RCNLD		$703,900