Key: 5744

Town of BREWSTER - Fiscal Year 2025

9/17/2024 2:15 pm SEQ #: 5,963

LEGAL

CURRENT OWNER	PARCEL ID	LOCATION
MOORE BEVERLY J TRUSTEE BEVERLY J MOORE TRUST 84 PADDOCK WAY BREWSTER, MA 02631	47-47-0	84 PADDOCK WAY

TRANSFER HISTORY	DOS	T	SALE PRICE	BK-PG (Cert)
MOORE BEVERLY J TRUSTEE	01/20/2023	F	100	35603-327
MOORE JOHN D & BEVERLY J	11/01/1999	F	1	12637-188
MOORE JOHN D & BEVERLY J	10/21/1999	QS	365,000	12615-319

CLASS	CLASS%	DESCRIPTION	BN ID	BN	CARD
1010	100	SINGLE FAMILY		1	1 of 1

PMT NO	PMT DT	TY	DESC	AMOUNT	INSP	BY	1st	%
		14	CYCLICAL GRO		12/20/2017	NF	100	100
648	12/13/2010	7	ALTERATIONS	18,550	01/11/2011	JH	100	100

LAND

CD	T	AC/SF/UN	Nbhd		St Ind		Infl		ADJ BASE	SAF	Topo		Lpi		VC	CREDIT AMT	ADJ VALUE
100	S	60,000	12	1.00	12A	1.00	A	1.00	207,144	1.00	10	0.90	R04	1.05			286,660
300	A	0.046	12	1.00	12A	1.00	A	1.00	11,340	1.00	10	0.90	R04	1.05			520

TOTAL	1.423 Acres	ZONING	RR	FRNT	0
Nbhd	NBHD 12	NOTE	T=SLOPE AND SHAPE, HOUSE BELOW GRADE		
St Ind	PADDOCK WAY				
Infl	AVERAGE				

ASSESSED	CURRENT	PREVIOUS
LAND	287,200	270,900
BUILDING	757,300	724,200
DETACHED	0	0
OTHER	0	0
TOTAL	**1,044,500**	**995,100**

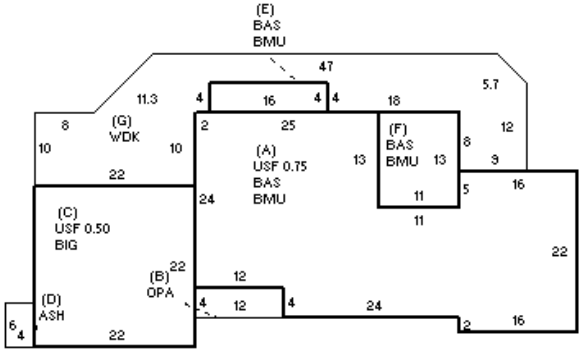

DETACHED

TY	QUAL	COND	DIM/NOTE	YB	UNITS	ADJ PRICE	RCNLD

PHOTO 12/20/2017

BLDG COMMENTS

BUILDING

BUILDING	CD	ADJ	DESC
MODEL	1		RESIDENTIAL
STYLE	4	1.02	CAPE [100%]
QUALITY	G	1.30	GOOD [100%]
FRAME	1	1.00	WD FRAME [100%]

MEASURE	12/20/2017	NF
LIST	11/7/2007	REO
REVIEW	5/3/2018	TD

YEAR BLT	1988	SIZE ADJ	1.000
NET AREA	2,495	DETAIL ADJ	1.000
$NLA(RCN)	$384	OVERALL	1.070

CAPACITY	UNITS	ADJ
STORIES	1.75	1.00
ROOMS	7	1.00
BEDROOMS	3	1.00
BATHROOMS	2	1.00
FIXTURES	9	$16,275
GARAGE SPACES	2	1.00
% BSMT FIN	0	1.00
# 1/2 BATHS	1	1.00
# OF UNITS	1	1.00

ELEMENT	CD	DESCRIPTION	ADJ
FOUNDATION	4	FLR & WALL	1.00
EXT COVER	1	WD SHINGLE	1.00
ROOF SHAPE	1	GABLE	1.00
ROOF COVER	1	ASPH/CMP SH	1.00
FLOOR COVER	1	HARDWOOD	1.00
INT FINISH	2	DRYWALL	1.00
HEATING/COOL	11	HTWT/CL AIR	1.05
FUEL SOURCE	1	OIL	1.00

S	BAT	T	DESCRIPTION	UNITS	YB	ADJ PRICE	RCN
+	BMU	N	BSMT UNFINISHED	1,376		75.59	104,005
+	BAS	L	BASE AREA	1,233	1988	342.88	422,774
+	USF	L	UPPER STORY FIN	1,119	1988	245.29	274,485
B	OPA	N	OPEN PORCH	48		69.55	3,338
C	BIG	N	BUILT-IN GARAGE	484		70.77	34,252
D	ASH	N	ATT SHED	24		40.57	974
F	BAS	L	BASE AREA	143	1988	342.89	49,033
G	WDK	N	WOOD DECK	660		54.53	35,988
	F21	O	FPL 2S 1OP	1		14,120.00	14,120
	ODS	O	OUTDOOR SHOWER	1		3,359.30	3,359

TOTAL RCN	958,602

CONDITION ELEM	CD
EXTERIOR	G
INTERIOR	A
KITCHEN	A
BATHS	A
HEAT/ELEC	A

EFF.YR/AGE	1991 / 32		
COND	21	21 %	
FUNC	0		
ECON	0		
DEPR	21	% GD	79
RCNLD			$757,300