Key: 613

Town of BREWSTER - Fiscal Year 2025

9/17/2024 2:15 pm SEQ #: 631

LEGAL

CURRENT OWNER	PARCEL ID	LOCATION
30 SWIFT LLC **C/O EDWARD GALONEK JR** **P O BOX 980** **FISKDALE, MA 01518**	**69-97-0**	**30 SWIFT LANE**

TRANSFER HISTORY	DOS	T	SALE PRICE	BK-PG (Cert)
30 SWIFT LLC	10/01/2008	U	1,400,000	23189-267
ECKHARDT MARION H	06/15/1964	XX		1257-222

CLASS	CLASS%	DESCRIPTION	BN ID	BN	CARD
1010	**100**	**SINGLE FAMILY**		**1**	**1 of 1**

PMT NO	PMT DT	TY	DESC	AMOUNT	INSP	BY	1st	%
465	05/27/2022	9	HVAC	46,577	02/23/2023	TCK	100	100
1033	11/17/2021	2	ADD	1,168,000	04/23/2024	NF	100	100
		30	ABATEMENT RE		10/23/2020	JMG	100	100
		30	ABATEMENT RE				100	100

LAND

CD	T	AC/SF/UN	Nbhd	St Ind	Infl	ADJ BASE	SAF	Topo	Lpi	VC	CREDIT AMT	ADJ VALUE
100	S	15,850	5 1.00	A 1.00	A 1.00	2,104,320	2.69	20 0.80	BSB 12.00			2,056,180

TOTAL	15,850 SF	ZONING	RM	FRNT	0
Nbhd	NBHD 5	NOTE	TOPO = Historic Form B, Demolition Permit Denied		
St Ind	AVERAGE				
Infl	AVERAGE				

ASSESSED	CURRENT	PREVIOUS
LAND	2,056,200	1,939,900
BUILDING	1,278,600	755,000
DETACHED	0	0
OTHER	0	0
TOTAL	**3,334,800**	**2,694,900**

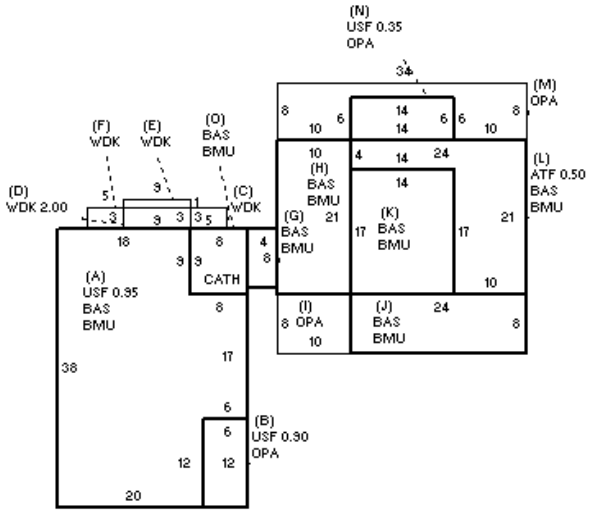

DETACHED

TY	QUAL	COND	DIM/NOTE	YB	UNITS	ADJ PRICE	RCNLD

PHOTO 05/18/2024

BLDG COMMENTS

BUILDING

BUILDING	CD	ADJ	DESC
MODEL	1		RESIDENTIAL
STYLE	5	1.05	COLONIAL [66%]
QUALITY	V	1.65	VERY GOOD [100%]
FRAME	1	1.00	WD FRAME [100%]

MEASURE	5/20/2022	TCK
LIST	5/20/2022	TCK
REVIEW	5/18/2024	EMZ

YEAR BLT	1900	SIZE ADJ	0.990
NET AREA	2,750	DETAIL ADJ	1.000
$NLA(RCN)	$479	OVERALL	1.080

CAPACITY	UNITS	ADJ
STORIES	1.95	1.00
ROOMS	7	1.00
BEDROOMS	5	1.00
BATHROOMS	3	1.00
FIXTURES	11	$25,483
GARAGE SPACES	0	1.00
% BSMT FIN	0	1.00
# 1/2 BATHS	1	1.00
# OF UNITS	1	1.00

ELEMENT	CD	DESCRIPTION	ADJ
FOUNDATION	4	FLR & WALL	1.00
EXT COVER	1	WD SHINGLE	1.00
ROOF SHAPE	3	GAMBREL	1.00
ROOF COVER	1	ASPH/CMP SH	1.00
FLOOR COVER	1	HARDWOOD	1.00
INT FINISH	2	DRYWALL	1.00
HEATING/COOL	9	WARM/CL AIR	1.03
FUEL SOURCE	2	GAS	1.00

S	BAT	T	DESCRIPTION	UNITS	YB	ADJ PRICE	RCN
+	BMU	N	BSMT UNFINISHED	1,854		87.95	163,065
+	BAS	L	BASE AREA	948	2021	408.78	387,522
+	USF	L	UPPER STORY FIN	867	2021	321.03	278,335
+	OPA	N	OPEN PORCH	424		88.21	37,401
+	WDK	N	WOOD DECK	93		69.16	6,432
+	BAS	L	BASE AREA	714	1900	408.78	291,868
J	BAS	L	BASE AREA	192	2021	408.78	78,485
L	ATF	N	ATTIC FINISH	133		135.84	18,067
N	USF	L	UPPER STORY FIN	29	1900	321.02	9,310
	F21	O	FPL 2S 1OP	1		17,908.20	17,908
	ODS	O	OUTDOOR SHOWER	1		4,260.50	4,261

TOTAL RCN	1,318,134

CONDITION ELEM	CD
EXTERIOR	V
INTERIOR	V
KITCHEN	V
BATHS	V
HEAT/ELEC	V

EFF.YR/AGE	2020 / 3	
COND	3 3 %	
FUNC	0	
ECON	0	
DEPR	3	% GD 97
RCNLD	$1,278,600	