Key: 6234

Town of BREWSTER - Fiscal Year 2025

9/17/2024 2:15 pm SEQ #: 6.468

LEGAL

CURRENT OWNER	PARCEL ID	LOCATION
TULLOCH ROBERT S P O BOX 1331 EAST ORLEANS, MA 02643	4-32-0	80 LEE WAY

TRANSFER HISTORY	DOS	T	SALE PRICE	BK-PG (Cert)
TULLOCH ROBERT S	03/27/2019	H		31911-238
TULLOCH ROBERT S & JULIA	11/18/1998	QS	63,000	11851-026
MCKAY DANIEL J	07/31/1997	QS	42,000	10880-055

CLASS	CLASS%	DESCRIPTION	BN ID	BN	CARD
1010	100	SINGLE FAMILY		1	1 of 1

PMT NO	PMT DT	TY	DESC	AMOUNT	INSP	BY	1st	%
NP		12	CYCLICAL NON		02/29/2008	JH	100	100
5	01/08/1999	5	OTHER	5,000	07/20/1999	JB	100	100
624	11/18/1998	5	OTHER	7,850	07/20/1999	JB	100	100
588	11/03/1998	1	NEW CONSTRUC	220,000	07/20/1999	JB	100	100
528	12/22/1992	5	OTHER	1,500			100	100

LAND

CD	T	AC/SF/UN	Nbhd	St Ind	Infl	ADJ BASE	SAF	Topo	Lpi	VC	CREDIT AMT	ADJ VALUE
100	S	41,706	12 1.00	A 1.00	A 1.00	219,200	1.28	A 1.00	R03 1.00			268,030

TOTAL	41,706 SF	ZONING	RL	FRNT	0
Nbhd	NBHD 12	NOTE			
St Ind	AVERAGE				
Infl	AVERAGE				

ASSESSED	CURRENT	PREVIOUS
LAND	268,000	252,900
BUILDING	871,500	822,900
DETACHED	6,400	6,400
OTHER	0	0
TOTAL	**1,145,900**	**1,082,200**

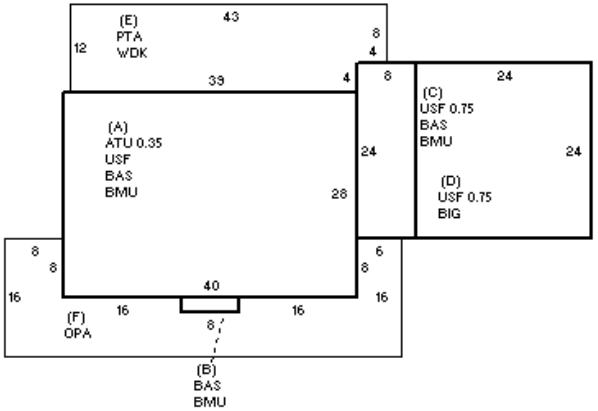

DETACHED

TY	QUAL	COND	DIM/NOTE	YB	UNITS	ADJ PRICE	RCNLD
SHF	A 1.00	30 0.70	12X16		192	20.77	2,800
SHF	A 1.00	30 0.70	6X8		48	22.94	800
HTB	A 1.00	30 0.70			1	4,058.10	2,800

PHOTO 02/08/2018

BLDG COMMENTS

BUILDING

BUILDING	CD	ADJ	DESC
MODEL	1		RESIDENTIAL
STYLE	5	1.05	COLONIAL [100%]
QUALITY	G	1.30	GOOD [100%]
FRAME	1	1.00	WD FRAME [100%]

MEASURE	2/8/2018	NF
LIST	2/8/2018	EST
REVIEW	12/18/2019	MR

YEAR BLT	1999	SIZE ADJ	0.980
NET AREA	3,024	DETAIL ADJ	1.000
$NLA(RCN)	$347	OVERALL	1.050

CAPACITY	UNITS	ADJ
STORIES	2	1.00
ROOMS	9	1.00
BEDROOMS	4	1.00
BATHROOMS	2	1.00
FIXTURES	8	$14,196
GARAGE SPACES	2	1.00
% BSMT FIN	0	1.00
# 1/2 BATHS	1	1.00
# OF UNITS	1	1.00

ELEMENT	CD	DESCRIPTION	ADJ
FOUNDATION	4	FLR & WALL	1.00
EXT COVER	1	WD SHINGLE	1.00
ROOF SHAPE	1	GABLE	1.00
ROOF COVER	1	ASPH/CMP SH	1.00
FLOOR COVER	1	HARDWOOD	1.00
INT FINISH	1	PLASTER	1.00
HEATING/COOL	2	HOT WATER	1.00
FUEL SOURCE	1	OIL	1.00

S	BAT	T	DESCRIPTION	UNITS	YB	ADJ PRICE	RCN
+	BMU	N	BSMT UNFINISHED	1,328		72.69	96,531
+	BAS	L	BASE AREA	1,328	1999	329.74	437,899
+	USF	L	UPPER STORY FIN	1,696	1999	205.78	349,005
A	ATU	N	ATTIC UNF	392		71.43	28,002
D	BIG	N	BUILT-IN GARAGE	576		65.10	37,496
E	WDK	N	WOOD DECK	500		52.44	26,219
E	PTA	N	PATIO	500		17.02	8,508
F	OPA	N	OPEN PORCH	528		66.89	35,315
	F21	O	FPL 2S 1OP	1		13,579.00	13,579
	ODS	O	OUTDOOR SHOWER	1		3,230.50	3,231

TOTAL RCN	1,049,980

CONDITION ELEM	CD
EXTERIOR	A
INTERIOR	A
KITCHEN	A
BATHS	A
HEAT/ELEC	A

EFF.YR/AGE	1999 / 24		
COND	17	17 %	
FUNC	0		
ECON	0		
DEPR	17	% GD	83
RCNLD			$871,500