Key: 6733

Town of BREWSTER - Fiscal Year 2025

9/17/2024 2:15 pm SEQ #: 6,959

LEGAL

CURRENT OWNER	PARCEL ID	LOCATION
BRADLEY PETER & VALERIE A TRUSTEES **168 POND STREET** **BREWSTER, MA 02631**	**43-32-0**	**168 POND STREET**

TRANSFER HISTORY	DOS	T	SALE PRICE	BK-PG (Cert)
BRADLEY PETER & VALERIE A	10/13/2020	F	1	(224032)
BRADLEY PETER & VALERIE A	06/05/2015	QS	617,500	(206420)
SCIBELLI ANDREW M & CATHE	05/20/2009	A	1	(188588)

CLASS	CLASS%	DESCRIPTION	BN ID	BN	CARD
1010	**100**	**SINGLE FAMILY**		**1**	**1 of 1**

PMT NO	PMT DT	TY	DESC	AMOUNT	INSP	BY	1st	%
23-370	04/26/2023	7	ALTERATIONS	6,200	06/07/2024	TCK	100	100
362	06/16/2020	3	OUT BUILDING	3,500	01/12/2021	NF	100	100
47	02/17/2010	3	OUT BUILDING	2,300	12/22/2010	MR	100	100
NP		12	CYCLICAL NON		01/14/2008	REO	100	100
314	06/04/1997	2	ADD	4,500	06/26/1998	BC	100	100

LAND

CD	T	AC/SF/UN	Nbhd	St Ind	Infl	ADJ BASE	SAF	Topo	Lpi	VC	CREDIT AMT	ADJ VALUE
100	S	51,401	12 1.00	12B 1.00	A 1.00	274,000	1.11	A 1.00	PV6 1.25			360,470

TOTAL	1.180 Acres	ZONING	RR	FRNT	0
Nbhd	NBHD 12	NOTE	DISTANT POND VIEW		
St Ind	DEERFIELD SUB				
Infl	AVERAGE				

ASSESSED	CURRENT	PREVIOUS
LAND	360,500	340,100
BUILDING	627,100	599,700
DETACHED	3,600	3,500
OTHER	0	0
TOTAL	**991,200**	**943,300**

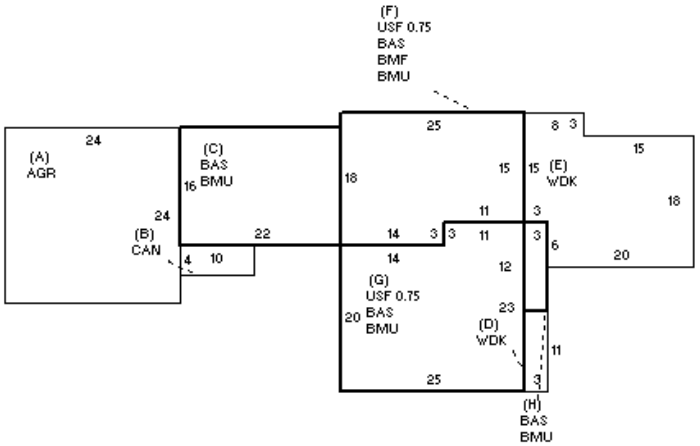

DETACHED

TY	QUAL	COND	DIM/NOTE	YB	UNITS	ADJ PRICE	RCNLD
SHF	A 1.00	10 0.90	8X10	2010	80	22.01	1,600
SHF	A 1.00	01 1.00	8X10	2020	89	22.01	2,000

PHOTO 06/14/2024

BLDG COMMENTS

BUILDING

BUILDING	CD	ADJ	DESC
MODEL	1		RESIDENTIAL
STYLE	4	1.02	CAPE [100%]
QUALITY	A+	1.20	AVG + [100%]
FRAME	1	1.00	WD FRAME [100%]

MEASURE	10/4/2017	NF
LIST	1/14/2008	REO
REVIEW	6/14/2024	EMZ

YEAR BLT	1994	SIZE ADJ	1.000
NET AREA	2,051	DETAIL ADJ	1.000
$NLA(RCN)	$373	OVERALL	1.030

CAPACITY	UNITS	ADJ
STORIES	1.75	1.00
ROOMS	7	1.00
BEDROOMS	4	1.00
BATHROOMS	3	1.00
FIXTURES	11	$17,675
GARAGE SPACES	2	1.00
% BSMT FIN	50	1.00
# 1/2 BATHS	1	1.00
# OF UNITS	1	1.00

ELEMENT	CD	DESCRIPTION	ADJ
FOUNDATION	4	FLR & WALL	1.00
EXT COVER	1	WD SHINGLE	1.00
ROOF SHAPE	1	GABLE	1.00
ROOF COVER	1	ASPH/CMP SH	1.00
FLOOR COVER	1	HARDWOOD	1.00
INT FINISH	2	DRYWALL	1.00
HEATING/COOL	15	HTWT+DCTLS AC	1.01
FUEL SOURCE	1	OIL	1.00

S	BAT	T	DESCRIPTION	UNITS	YB	ADJ PRICE	RCN
A	AGR	N	ATT GARAGE	576		46.88	27,003
B	CAN	N	CANOPY	40		57.60	2,304
+	BMU	N	BSMT UNFINISHED	1,338		67.16	89,865
+	BAS	L	BASE AREA	1,338	1994	304.67	407,654
+	WDK	N	WOOD DECK	453		48.45	21,949
F	BMF	N	BSMT FINISH	417		49.85	20,790
+	USF	L	UPPER STORY FIN	713	1994	227.24	162,020
	F21	O	FPL 2S 1OP	1		12,546.60	12,547
	ODS	O	OUTDOOR SHOWER	1		2,984.90	2,985

TOTAL RCN	764,790

CONDITION ELEM	CD
EXTERIOR	G
INTERIOR	A
KITCHEN	A
BATHS	A
HEAT/ELEC	A

EFF.YR/AGE	1997 / 26		
COND	18	18 %	
FUNC	0		
ECON	0		
DEPR	18	% GD	82
RCNLD			$627,100