Key: 6801

Town of BREWSTER - Fiscal Year 2025

9/17/2024 2:15 pm SEQ #: 7,028

LEGAL

CURRENT OWNER	PARCEL ID	LOCATION
HUBBARD JOHN E IV 650 GREAT FIELDS ROAD BREWSTER, MA 02631	52-58-0	650 GREAT FIELDS ROAD

TRANSFER HISTORY	DOS	T	SALE PRICE	BK-PG (Cert)
HUBBARD JOHN E IV	11/18/2015	QS	445,000	(207992)
BENSON JADE D &	06/04/2012	F	1	(197270)
BENSON JADE D &	07/09/2010	QS	450,000	(191913)

CLASS	CLASS%	DESCRIPTION	BN ID	BN	CARD
1010	100	SINGLE FAMILY		1	1 of 1

PMT NO	PMT DT	TY	DESC	AMOUNT	INSP	BY	1st	%
237	03/19/2013	7	ALTERATIONS	4,200	08/21/2014	RJM	100	100
NP		12	CYCLICAL NON		06/21/2007	JH	100	100

LAND

CD	T	AC/SF/UN	Nbhd	St Ind	Infl	ADJ BASE	SAF	Topo	Lpi	VC	CREDIT AMT	ADJ VALUE
100	S	60,000	14 1.00	A 1.00	A 1.00	177,552	1.00	10 0.90	RM3 0.90			245,710
300	A	0.633	14 1.00	A 1.00	A 1.00	10,800	1.00	A 1.00	RM3 0.90			6,840

TOTAL	2.010 Acres	ZONING	RM	FRNT	0
Nbhd	NBHD 14	NOTE	T=SLOPE		
St Ind	AVERAGE				
Infl	AVERAGE				

ASSESSED	CURRENT	PREVIOUS
LAND	252,600	238,300
BUILDING	438,000	418,700
DETACHED	4,500	4,500
OTHER	0	0
TOTAL	**695,100**	**661,500**

DETACHED

TY	QUAL	COND	DIM/NOTE	YB	UNITS	ADJ PRICE	RCNLD
SHF	A 1.00	50 0.50	10X12		120	21.39	1,300
HTB	A 1.00	20 0.80			1	4,058.10	3,200

PHOTO 09/14/2017

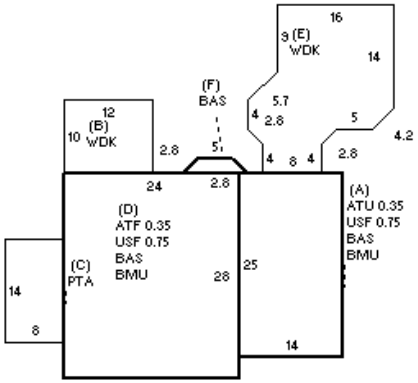

BLDG COMMENTS

BUILDING

BUILDING	CD	ADJ	DESC
MODEL	1		RESIDENTIAL
STYLE	5	1.05	COLONIAL [100%]
QUALITY	A	1.00	AVG [100%]
FRAME	1	1.00	WD FRAME [100%]

MEASURE	9/14/2017	NF
LIST	6/22/2007	JH
REVIEW	11/8/2017	TD

YEAR BLT	1984	SIZE ADJ	1.000
NET AREA	1,803	DETAIL ADJ	1.000
$NLA(RCN)	$307	OVERALL	1.050

CAPACITY	UNITS	ADJ
STORIES	1.75	1.00
ROOMS	6	1.00
BEDROOMS	3	1.00
BATHROOMS	1	1.00
FIXTURES	5	$6,825
GARAGE SPACES	0	1.00
% BSMT FIN	0	1.00
# 1/2 BATHS	1	1.00
# OF UNITS	1	1.00

ELEMENT	CD	DESCRIPTION	ADJ
FOUNDATION	4	FLR & WALL	1.00
EXT COVER	1	WD SHINGLE	1.00
ROOF SHAPE	6	SALTBOX	1.00
ROOF COVER	1	ASPH/CMP SH	1.00
FLOOR COVER	2	SOFTWOOD	1.00
INT FINISH	2	DRYWALL	1.00
HEATING/COOL	2	HOT WATER	1.00
FUEL SOURCE	1	OIL	1.00

S	BAT	T	DESCRIPTION	UNITS	YB	ADJ PRICE	RCN
+	BMU	N	BSMT UNFINISHED	1,022		59.29	60,590
+	USF	L	UPPER STORY FIN	767	1984	193.04	148,062
A	ATU	N	ATTIC UNF	123		56.07	6,896
+	WDK	N	WOOD DECK	464		41.16	19,099
C	PTA	N	PATIO	112		16.70	1,870
D	ATF	N	ATTIC FINISH	235		80.85	19,000
+	BAS	L	BASE AREA	1,036	1984	274.35	284,231
	MST	O	MAS/METAL STACK	1		5,278.40	5,278
	ODS	O	OUTDOOR SHOWER	1		2,535.80	2,536

TOTAL RCN	554,387
CONDITION ELEM	CD
EXTERIOR	G
INTERIOR	G
KITCHEN	A
BATHS	A
HEAT/ELEC	A

EFF.YR/AGE	1991 / 32		
COND	21	21 %	
FUNC	0		
ECON	0		
DEPR	21	% GD	79
RCNLD			$438,000