Key: 6886

Town of BREWSTER - Fiscal Year 2025

9/17/2024 2:15 pm SEQ #: 7,113

LEGAL

CURRENT OWNER	PARCEL ID	LOCATION
WAGER GLORIA S TRUSTEE WAGER REALTY TRUST 6 PINECREST ROAD ANDOVER, MA 01810	62-16-0	46 GULLS WAY

TRANSFER HISTORY	DOS	T	SALE PRICE	BK-PG (Cert)
WAGER GLORIA S TRUSTEE	12/28/2023	DC		(205822)
WAGER GEOFFREY & GLORIA S	03/23/2015	F	1	(205822)
WAGER GEOFFREY & GLORIA	07/09/1993	XX		(130697)

CLASS	CLASS%	DESCRIPTION	BN ID	BN	CARD
1010	100	SINGLE FAMILY		1	1 of 1

PMT NO	PMT DT	TY	DESC	AMOUNT	INSP	BY	1st	%
310	04/11/2013	7	ALTERATIONS	8,900	08/06/2014	RJM	100	100
		12	CYCLICAL NON		03/21/2013	SF	100	100
510	08/26/2004	2	ADD	50,000	04/30/2005	JB	100	100

LAND

CD	T	AC/SF/UN	Nbhd	St Ind	Infl	ADJ BASE	SAF	Topo	Lpi	VC	CREDIT AMT	ADJ VALUE
100	S	24,500	13 1.00	A 1.00	A 1.00	219,200	1.88	A 1.00	R03 1.00			232,170

TOTAL	24,500 SF	ZONING	RL	FRNT	0
Nbhd	NBHD 13	NOTE			
St Ind	AVERAGE				
Infl	AVERAGE				

ASSESSED	CURRENT	PREVIOUS
LAND	232,200	219,000
BUILDING	459,900	434,300
DETACHED	0	0
OTHER	0	0
TOTAL	**692,100**	**653,300**

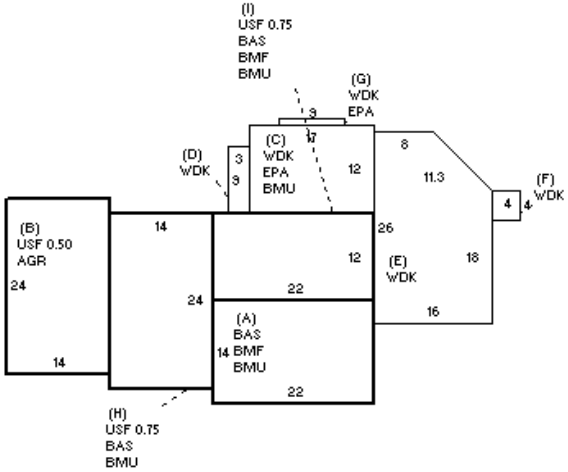

DETACHED

TY	QUAL	COND	DIM/NOTE	YB	UNITS	ADJ PRICE	RCNLD

PHOTO 01/19/2021

BLDG COMMENTS

BUILDING

BUILDING	CD	ADJ	DESC
MODEL	1		RESIDENTIAL
STYLE	4	1.02	CAPE [100%]
QUALITY	+	1.10	PLUS AVE [100%]
FRAME	1	1.00	WD FRAME [100%]

MEASURE	1/19/2021	TCK
LIST	8/6/2014	RJM
REVIEW	2/1/2021	MR

YEAR BLT	1988	SIZE ADJ	1.000
NET AREA	1,526	DETAIL ADJ	1.000
$NLA(RCN)	$382	OVERALL	1.030

CAPACITY	UNITS	ADJ
STORIES	1.75	1.00
ROOMS	6	1.00
BEDROOMS	3	1.00
BATHROOMS	2	1.00
FIXTURES	6	$8,837
GARAGE SPACES	0	1.00
% BSMT FIN	50	1.00
# 1/2 BATHS	0	1.00
# OF UNITS	1	1.00

ELEMENT	CD	DESCRIPTION	ADJ
FOUNDATION	4	FLR & WALL	1.00
EXT COVER	1	WD SHINGLE	1.00
ROOF SHAPE	6	SALTBOX	1.00
ROOF COVER	1	ASPH/CMP SH	1.00
FLOOR COVER	1	HARDWOOD	1.00
INT FINISH	2	DRYWALL	1.00
HEATING/COOL	15	HTWT+DCTLS AC	1.01
FUEL SOURCE	2	GAS	1.00

S	BAT	T	DESCRIPTION	UNITS	YB	ADJ PRICE	RCN
+	BMU	N	BSMT UNFINISHED	1,112		63.97	71,138
+	BMF	N	BSMT FINISH	572		45.70	26,141
+	BAS	L	BASE AREA	908	1988	301.63	273,878
B	AGR	N	ATT GARAGE	336		47.86	16,080
B	USF	L	UPPER STORY FIN	168	2013	208.30	34,994
+	WDK	N	WOOD DECK	640		44.41	28,425
+	EPA	N	ENCLOSED PORCH	213		82.09	17,485
+	USF	L	UPPER STORY FIN	450	1988	208.30	93,735
	F21	O	FPL 2S 1OP	1		11,501.10	11,501

TOTAL RCN	582,213
CONDITION ELEM	CD
EXTERIOR	A
INTERIOR	A
KITCHEN	A
BATHS	A
HEAT/ELEC	A
EFF.YR/AGE	1991 / 32
COND	21 21 %
FUNC	0
ECON	0
DEPR	21 % GD 79
RCNLD	$459,900