Key: 6945

Town of BREWSTER - Fiscal Year 2025

9/17/2024 2:15 pm SEQ #: 7,171

LEGAL

CURRENT OWNER	PARCEL ID	LOCATION
VESSELLA JOHN JR & CYNTHIA 146 SURREY LANE BREWSTER, MA 02631	43-15-0	146 SURREY LANE

TRANSFER HISTORY	DOS	T	SALE PRICE	BK-PG (Cert)
VESSELLA JOHN JR & CYNTHI	05/06/1985	XX		4518-266

CLASS	CLASS%	DESCRIPTION	BN ID	BN	CARD
1010	100	SINGLE FAMILY		1	1 of 1

PMT NO	PMT DT	TY	DESC	AMOUNT	INSP	BY	1st	%
716	08/03/2016	77	SOLAR PANELS	24,000	03/13/2017	NF	100	100
455	06/22/2015	77	SOLAR PANELS	24,000	03/13/2017	NF	100	100
200	04/08/2008	7	ALTERATIONS	4,800	03/11/2009	JH	100	100
NP		12	CYCLICAL NON		04/30/2007	JH	100	100
699	11/24/1999	2	ADD	5,000	06/22/2000	LB	100	100

LAND

CD	T	AC/SF/UN	Nbhd	St Ind	Infl	ADJ BASE	SAF	Topo	Lpi	VC	CREDIT AMT	ADJ VALUE
100	S	42,200	14 1.00	A 1.00	A 1.00	252,080	1.27	A 1.00	R03 1.15			309,490

TOTAL	42,200 SF	ZONING	RM	FRNT	0
Nbhd	NBHD 14	NOTE			
St Ind	AVERAGE				
Infl	AVERAGE				

ASSESSED	CURRENT	PREVIOUS
LAND	309,500	317,400
BUILDING	689,900	651,300
DETACHED	3,600	3,500
OTHER	0	0
TOTAL	**1,003,000**	**972,200**

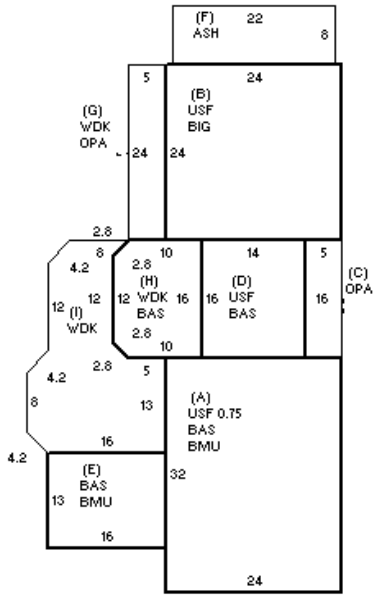

DETACHED

TY	QUAL	COND	DIM/NOTE	YB	UNITS	ADJ PRICE	RCNLD
SHF	G 1.20	10 0.90	16 X10	2001	160	24.92	3,600

PHOTO 03/13/2017

BLDG COMMENTS

SOLAR PANELS

BUILDING

BUILDING	CD	ADJ	DESC
MODEL	1		RESIDENTIAL
STYLE	5	1.05	COLONIAL [100%]
QUALITY	+	1.10	PLUS AVE [100%]
FRAME	1	1.00	WD FRAME [100%]

MEASURE	4/30/2007	JH
LIST	4/30/2007	EST
REVIEW	4/13/2017	TD

YEAR BLT	1985	SIZE ADJ	0.990
NET AREA	2,764	DETAIL ADJ	1.000
$NLA(RCN)	$312	OVERALL	1.100

CAPACITY	UNITS	ADJ
STORIES	1.75	1.00
ROOMS	8	1.00
BEDROOMS	2	1.00
BATHROOMS	2	1.00
FIXTURES	6	$9,438
GARAGE SPACES	0	1.00
% BSMT FIN	0	1.00
# 1/2 BATHS	0	1.00
# OF UNITS	1	1.00

ELEMENT	CD	DESCRIPTION	ADJ
FOUNDATION	4	FLR & WALL	1.00
EXT COVER	2	CLAPBOARD	1.00
ROOF SHAPE	1	GABLE	1.00
ROOF COVER	1	ASPH/CMP SH	1.00
FLOOR COVER	2	SOFTWOOD	1.00
INT FINISH	2	DRYWALL	1.00
HEATING/COOL	11	HTWT/CL AIR	1.05
FUEL SOURCE	1	OIL	1.00

S	BAT	T	DESCRIPTION	UNITS	YB	ADJ PRICE	RCN
+	BMU	N	BSMT UNFINISHED	976		70.68	68,980
+	USF	L	UPPER STORY FIN	1,376	1985	202.25	278,301
B	BIG	N	BUILT-IN GARAGE	576		58.29	33,577
+	OPA	N	OPEN PORCH	200		59.90	11,979
+	BAS	L	BASE AREA	1,388	1985	295.28	409,852
F	ASH	N	ATT SHED	176		31.62	5,565
+	WDK	N	WOOD DECK	693		46.96	32,542
	F21	O	FPL 2S 1OP	1		12,159.90	12,160

TOTAL RCN	862,394

CONDITION ELEM	CD
EXTERIOR	V
INTERIOR	A
KITCHEN	A
BATHS	A
HEAT/ELEC	A

EFF.YR/AGE	1993 / 30	
COND	20	20 %
FUNC	0	
ECON	0	
DEPR	20	% GD 80
RCNLD		$689,900