Key: 7043

Town of BREWSTER - Fiscal Year 2025

9/17/2024 2:15 pm SEQ #: 7,271

LEGAL

CURRENT OWNER	PARCEL ID	LOCATION
JOHNSON CRAIG & VIRGINIA 37 BROOK TRAIL ROAD BREWSTER, MA 02631	52-142-0	37 BROOK TRAIL ROAD

TRANSFER HISTORY	DOS	T	SALE PRICE	BK-PG (Cert)
JOHNSON CRAIG & VIRGINIA	06/28/1983	XX		3782-258

CLASS	CLASS%	DESCRIPTION	BN ID	BN	CARD
1010	100	SINGLE FAMILY		1	1 of 1

PMT NO	PMT DT	TY	DESC	AMOUNT	INSP	BY	1st	%
98	02/05/2018	7	ALTERATIONS	5,000	07/16/2019	NF	100	100
475	06/10/2013	7	ALTERATIONS		08/21/2014	RJM	100	100
NP		12	CYCLICAL NON		04/18/2007	JH	100	100
546	09/22/1999	3	OUT BUILDING	2,000	04/18/2007	JH	100	100
621	12/22/1993	2	ADD	50,000	01/01/1995	RD	100	100

LAND

CD	T	AC/SF/UN	Nbhd	St Ind	Infl	ADJ BASE	SAF	Topo	Lpi	VC	CREDIT AMT	ADJ VALUE
100	S	17,100	14 1.00	A 1.00	A 1.00	252,080	2.52	A 1.00	R03 1.15			249,480

TOTAL	17,100 SF	ZONING	RM	FRNT	0
Nbhd	NBHD 14	NOTE			
St Ind	AVERAGE				
Infl	AVERAGE				

ASSESSED	CURRENT	PREVIOUS
LAND	249,500	255,800
BUILDING	556,900	526,100
DETACHED	5,100	5,000
OTHER	0	0
TOTAL	**811,500**	**786,900**

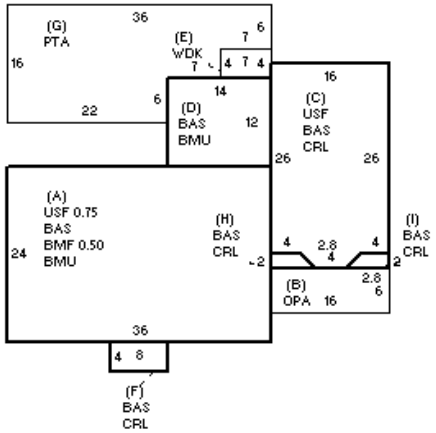

DETACHED

TY	QUAL	COND	DIM/NOTE	YB	UNITS	ADJ PRICE	RCNLD
SHF	A 1.00	50 0.50	10X16	1999	160	20.77	1,700
HTB	A 1.00	20 0.80			1	4,058.10	3,200
SHF	A 1.00	50 0.50	5X3		15	22.94	200

PHOTO 07/16/2019

BUILDING

BUILDING	CD	ADJ	DESC
MODEL	1		RESIDENTIAL
STYLE	4	1.02	CAPE [100%]
QUALITY	A	1.00	AVG [100%]
FRAME	1	1.00	WD FRAME [100%]

MEASURE	8/10/2017	NF
LIST	8/10/2017	NF
REVIEW	7/23/2019	EMZ

BLDG COMMENTS

EXTRA SINK

YEAR BLT	1983	SIZE ADJ	0.990
NET AREA	2,588	DETAIL ADJ	1.000
$NLA(RCN)	$279	OVERALL	1.070

CAPACITY	UNITS	ADJ
STORIES	1.75	1.00
ROOMS	8	1.00
BEDROOMS	3	1.00
BATHROOMS	3	1.00
FIXTURES	11	$15,301
GARAGE SPACES	0	1.00
% BSMT FIN	50	1.00
# 1/2 BATHS	0	1.00
# OF UNITS	1	1.00

ELEMENT	CD	DESCRIPTION	ADJ
FOUNDATION	4	FLR & WALL	1.00
EXT COVER	1	WD SHINGLE	1.00
ROOF SHAPE	6	SALTBOX	1.00
ROOF COVER	1	ASPH/CMP SH	1.00
FLOOR COVER	1	HARDWOOD	1.00
INT FINISH	2	DRYWALL	1.00
HEATING/COOL	11	HTWT/CL AIR	1.05
FUEL SOURCE	1	OIL	1.00

S	BAT	T	DESCRIPTION	UNITS	YB	ADJ PRICE	RCN
+	BMU	N	BSMT UNFINISHED	1,032		59.81	61,725
A	BMF	N	BSMT FINISH	432		42.73	18,458
+	BAS	L	BASE AREA	1,512	1983	255.90	386,914
+	USF	L	UPPER STORY FIN	1,076	1983	186.80	200,998
B	OPA	N	OPEN PORCH	96		52.96	5,085
C	CRL	N	BSMT CRAWL	428		32.17	13,767
E	WDK	N	WOOD DECK	28		41.54	1,163
F	CRL	N	BSMT CRAWL	32		32.18	1,030
G	PTA	N	PATIO	464		13.47	6,252
H	CRL	N	BSMT CRAWL	10		32.20	322
I	CRL	N	BSMT CRAWL	10		32.20	322
	GFP	O	GAS FIREPLACE	2		3,310.85	6,622
	MST	O	MAS/METAL STACK	1		5,325.10	5,325

TOTAL RCN	723,283

CONDITION ELEM	CD
EXTERIOR	G
INTERIOR	A
KITCHEN	A
BATHS	A
HEAT/ELEC	A

EFF.YR/AGE	1987 / 36		
COND	23	23 %	
FUNC	0		
ECON	0		
DEPR	23	% GD	77
RCNLD	$556,900		