Key: 7206

Town of BREWSTER - Fiscal Year 2025

9/17/2024 2:15 pm SEQ #: 7,435

LEGAL

CURRENT OWNER	PARCEL ID	LOCATION
CARTY JOSEPH F & DIANA POHLY 42 KONOHASSETT CARTWAY BREWSTER, MA 02631	72-25-0	42 KONOHASSETT CARTWAY

TRANSFER HISTORY	DOS	T	SALE PRICE	BK-PG (Cert)
CARTY JOSEPH F & DIANA PO	09/29/2000	QS	460,000	13271-281
FISHER JAMES F & CHRISTIN	01/11/1994	QS	281,000	8995-246

CLASS	CLASS%	DESCRIPTION	BN ID	BN	CARD
1010	100	SINGLE FAMILY		1	1 of 1

PMT NO	PMT DT	TY	DESC	AMOUNT	INSP	BY	1st	%
734	09/03/2013	2	ADD	50,000	08/19/2014	RJM	100	100
672	10/17/2007	7	ALTERATIONS	5,000	09/24/2008	JH	100	100
798	11/07/2006	1	NEW CONSTRUC	500,000	02/03/2009	JH	100	100
767	10/31/2006	6	DEMO	6,000	08/07/2007	JH	100	100
607	10/14/2005	7	ALTERATIONS	9,000	08/07/2007	JH	100	100

LAND

CD	T	AC/SF/UN	Nbhd	St Ind	Infl	ADJ BASE	SAF	Topo	Lpi	VC	CREDIT AMT	ADJ VALUE
100	S	57,630	13 1.00	A 1.00	A 1.00	767,200	1.04	A 1.00	PF4 3.50			1,053,980

TOTAL	1.323 Acres	ZONING	RR	FRNT	0
Nbhd	NBHD 13	NOTE			
St Ind	AVERAGE				
Infl	AVERAGE				

ASSESSED	CURRENT	PREVIOUS
LAND	1,054,000	994,400
BUILDING	569,200	544,000
DETACHED	35,300	35,000
OTHER	0	0
TOTAL	**1,658,500**	**1,573,400**

DETACHED

TY	QUAL	COND	DIM/NOTE	YB	UNITS	ADJ PRICE	RCNLD
BHF	A 1.00	20 0.80	12X20		240	22.50	4,300
GFL	+ 1.10	15 0.85	24X23	2003	552	59.62	28,000
GZB	A 1.00	15 0.85		2003	96	36.50	3,000

PHOTO 02/02/2021

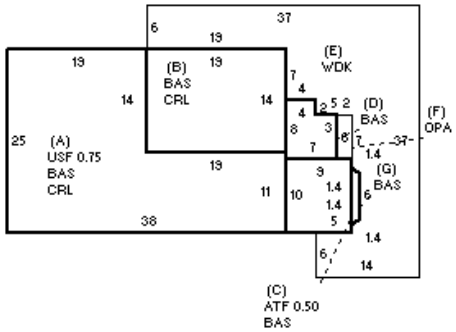

BLDG COMMENTS

BUILDING

BUILDING	CD	ADJ	DESC
MODEL	1		RESIDENTIAL
STYLE	8	0.95	CONTEMPOR [100%]
QUALITY	G+	1.45	GOOD + [100%]
FRAME	1	1.00	WD FRAME [100%]

MEASURE	2/2/2021	TCK
LIST	2/2/2021	EST
REVIEW	3/10/2021	MR

YEAR BLT	2006	SIZE ADJ	1.000
NET AREA	1,610	DETAIL ADJ	1.000
$NLA(RCN)	$411	OVERALL	0.990

CAPACITY	UNITS	ADJ
STORIES	1.75	1.00
ROOMS	6	1.00
BEDROOMS	2	1.00
BATHROOMS	2	1.00
FIXTURES	9	$16,795
GARAGE SPACES	0	1.00
% BSMT FIN	0	1.00
# 1/2 BATHS	0	1.00
# OF UNITS	1	1.00

ELEMENT	CD	DESCRIPTION	ADJ
FOUNDATION	3	FOUN WALL	1.00
EXT COVER	1	WD SHINGLE	1.00
ROOF SHAPE	1	GABLE	1.00
ROOF COVER	2	WD SHINGLE	1.01
FLOOR COVER	1	HARDWOOD	1.00
INT FINISH	2	DRYWALL	1.00
HEATING/COOL	9	WARM/CL AIR	1.03
FUEL SOURCE	2	GAS	1.00

S	BAT	T	DESCRIPTION	UNITS	YB	ADJ PRICE	RCN
A	CRL	N	BSMT CRAWL	684		40.63	27,788
A	USF	L	UPPER STORY FIN	513	2006	266.61	136,769
B	CRL	N	BSMT CRAWL	266		43.59	11,595
B	BAS	L	BASE AREA	266	2006	375.08	99,772
+	BAS	L	BASE AREA	831	2006	375.08	311,693
C	ATF	N	ATTIC FINISH	45		110.53	4,974
E	WDK	N	WOOD DECK	597		56.27	33,594
F	OPA	N	OPEN PORCH	12		71.78	861
	F21	O	FPL 2S 1OP	1		14,571.80	14,572
	ODS	O	OUTDOOR SHOWER	1		3,466.70	3,467

TOTAL RCN	661,879

CONDITION ELEM	CD
EXTERIOR	A
INTERIOR	A
KITCHEN	A
BATHS	A
HEAT/ELEC	A

EFF.YR/AGE	2006 / 17		
COND	14	14 %	
FUNC	0		
ECON	0		
DEPR	14	% GD	86
RCNLD			$569,200