Key: 7305

Town of BREWSTER - Fiscal Year 2025

9/17/2024 2:15 pm SEQ #: 7,534

LEGAL

CURRENT OWNER	PARCEL ID	LOCATION
FRAHER MICHAEL J & KAREN A **C/O FRAHER MICHAEL J** **926 CROWELLS BOG ROAD** **BREWSTER, MA 02631**	**84-23-0**	**926 CROWELLS BOG ROAD**

TRANSFER HISTORY	DOS	T	SALE PRICE	BK-PG (Cert)
FRAHER MICHAEL J	05/31/2024	H		36394-219
FRAHER MICHAEL J & KAREN	09/08/1987	XX		5908-162

CLASS	CLASS%	DESCRIPTION	BN ID	BN	CARD
1010	**100**	**SINGLE FAMILY**		**1**	**1 of 1**

PMT NO	PMT DT	TY	DESC	AMOUNT	INSP	BY	1st	%
352	04/25/2016	77	SOLAR PANELS	16,000	03/03/2017	NF	100	100
796	10/16/2015	7	ALTERATIONS	13,590	04/22/2016	WFF	100	100
430	06/19/2007	3	OUT BUILDING	2,000	07/25/2008	DHT	100	100
		12	CYCLICAL NON		01/13/2004	TG	100	100
40	01/28/1998	5	OTHER	10,000	04/08/1998	BC	100	100

LAND

CD	T	AC/SF/UN	Nbhd	St Ind	Infl	ADJ BASE	SAF	Topo	Lpi	VC	CREDIT AMT	ADJ VALUE
100	S	19,900	15 1.00	A 1.00	A 1.00	328,800	2.22	A 1.00	R04 1.50			333,810

TOTAL	19,900 SF	ZONING	RM	FRNT	0
Nbhd	NBHD 15	NOTE			
St Ind	AVERAGE				
Infl	AVERAGE				

ASSESSED	CURRENT	PREVIOUS
LAND	333,800	314,900
BUILDING	603,800	577,100
DETACHED	2,200	2,200
OTHER	0	0
TOTAL	**939,800**	**894,200**

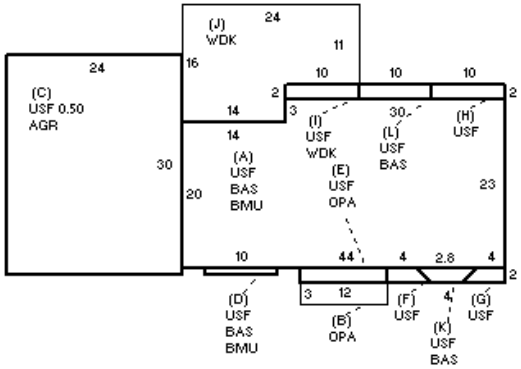

DETACHED

TY	QUAL	COND	DIM/NOTE	YB	UNITS	ADJ PRICE	RCNLD
SHF	A 1.00	15 0.85	10X12	2007	120	21.39	2,200

PHOTO 03/16/2021

BLDG COMMENTS

INFO @ DOOR 3/16/21

BUILDING

BUILDING	CD	ADJ	DESC
MODEL	1		RESIDENTIAL
STYLE	8	0.95	CONTEMPOR [100%]
QUALITY	A+	1.20	AVG + [100%]
FRAME	1	1.00	WD FRAME [100%]

MEASURE	3/16/2021	NF
LIST	3/16/2021	EST
REVIEW	11/11/2021	EMZ

YEAR BLT	1998	SIZE ADJ	1.000
NET AREA	2,468	DETAIL ADJ	1.000
$NLA(RCN)	$298	OVERALL	0.980

CAPACITY	UNITS	ADJ
STORIES	2	1.00
ROOMS	8	1.00
BEDROOMS	3	1.00
BATHROOMS	2	1.00
FIXTURES	8	$12,230
GARAGE SPACES	0	1.00
% BSMT FIN	0	1.00
# 1/2 BATHS	1	1.00
# OF UNITS	0	1.00

ELEMENT	CD	DESCRIPTION	ADJ
FOUNDATION	4	FLR & WALL	1.00
EXT COVER	2	CLAPBOARD	1.00
ROOF SHAPE	1	GABLE	1.00
ROOF COVER	1	ASPH/CMP SH	1.00
FLOOR COVER	1	HARDWOOD	1.00
INT FINISH	2	DRYWALL	1.00
HEATING/COOL	9	WARM/CL AIR	1.03
FUEL SOURCE	2	GAS	1.00

S	BAT	T	DESCRIPTION	UNITS	YB	ADJ PRICE	RCN
+	BMU	N	BSMT UNFINISHED	980		69.38	67,996
+	OPA	N	OPEN PORCH	60		58.80	3,528
C	AGR	N	ATT GARAGE	720		43.59	31,385
+	USF	L	UPPER STORY FIN	1,456	1998	189.73	276,248
+	WDK	N	WOOD DECK	354		46.10	16,319
+	BAS	L	BASE AREA	1,012	1998	307.28	310,964
	F21	O	FPL 2S 1OP	1		11,937.60	11,938
	ODS	O	OUTDOOR SHOWER	2		2,840.05	5,680

TOTAL RCN	736,289

CONDITION ELEM	CD
EXTERIOR	A
INTERIOR	A
KITCHEN	A
BATHS	A
HEAT/ELEC	A

EFF.YR/AGE	1998 / 25	
COND	18	18 %
FUNC	0	
ECON	0	
DEPR	18	% GD 82
RCNLD		$603,800