Key: 7360

Town of BREWSTER - Fiscal Year 2025

9/17/2024 2:15 pm SEQ #: 7,590

LEGAL

CURRENT OWNER	PARCEL ID	LOCATION
HOBSON CHRISTOPHER A & KRISTA L 36 SHERMANS WAY WESTWOOD, MA 02090	73-98-0	10 TANGLEWOOD ROAD

TRANSFER HISTORY	DOS	T	SALE PRICE	BK-PG (Cert)
HOBSON CHRISTOPHER A & KR	11/22/2021	F	1	34686-240
HOBSON CHRISTOPHER A & KR	12/18/2020	P	320,000	33590-113
REMY JANE M TRUSTEE &	12/07/2007	F	100	22520-306

CLASS	CLASS%	DESCRIPTION	BN ID	BN	CARD
1010	100	SINGLE FAMILY		1	1 of 1

PMT NO	PMT DT	TY	DESC	AMOUNT	INSP	BY	1st	%
658	08/25/2022	9	HVAC	56,677	05/21/2024	TCK	100	100
102	02/08/2022	1	NEW CONSTRUC	973,000	05/21/2024	TCK	90	100
	12/18/2020	15	SALE REVIEW	320,000	03/29/2021	JMG	100	100

LAND

CD	T	AC/SF/UN	Nbhd	St Ind	Infl	ADJ BASE	SAF	Topo	Lpi	VC	CREDIT AMT	ADJ VALUE
100	S	18,800	15 1.00	A 1.00	A 1.00	328,800	2.33	A 1.00	R04 1.50			330,730

TOTAL	18,800 SF	ZONING	RR	FRNT	0
Nbhd	NBHD 15	NOTE			
St Ind	AVERAGE				
Infl	AVERAGE				

ASSESSED	CURRENT	PREVIOUS
LAND	330,700	312,000
BUILDING	889,700	326,700
DETACHED	19,700	0
OTHER	0	0
TOTAL	**1,240,100**	**638,700**

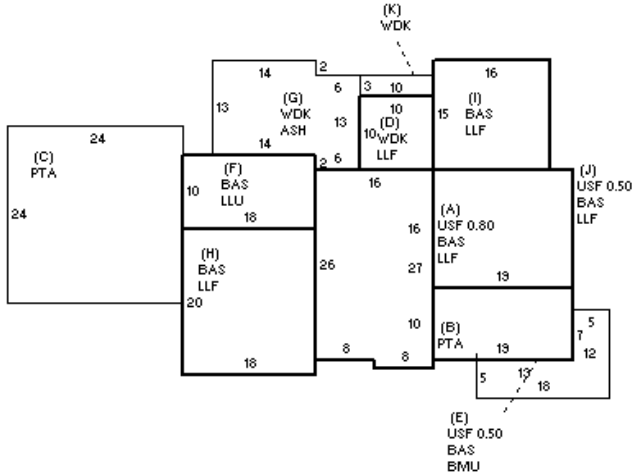

DETACHED

TY	QUAL	COND	DIM/NOTE	YB	UNITS	ADJ PRICE	RCNLD
DGF	G 1.20	01 1.00	24X24	2022	576	34.19	19,700

PHOTO 06/05/2024

BLDG COMMENTS

LLF= BDRM, LNDRY, REC RM, BATH PER PLANS
5/23/24

BUILDING

BUILDING	CD	ADJ	DESC
MODEL	1		RESIDENTIAL
STYLE	4	1.02	CAPE [100%]
QUALITY	G	1.30	GOOD [100%]
FRAME	1	1.00	WD FRAME [100%]

MEASURE	5/21/2024	TCK
LIST	5/21/2024	EST
REVIEW	6/5/2024	EMZ

YEAR BLT	2022	SIZE ADJ	0.970
NET AREA	3,712	DETAIL ADJ	1.000
$NLA(RCN)	$269	OVERALL	1.050

CAPACITY	UNITS	ADJ
STORIES	1.65	1.00
ROOMS	10	1.00
BEDROOMS	4	1.00
BATHROOMS	3	1.00
FIXTURES	14	$24,843
GARAGE SPACES	2	1.00
% BSMT FIN	85	1.00
# 1/2 BATHS	1	1.00
# OF UNITS	1	1.00

ELEMENT	CD	DESCRIPTION	ADJ
FOUNDATION	4	FLR & WALL	1.00
EXT COVER	1	WD SHINGLE	1.00
ROOF SHAPE	1	GABLE	1.00
ROOF COVER	1	ASPH/CMP SH	1.00
FLOOR COVER	1	HARDWOOD	1.00
INT FINISH	2	DRYWALL	1.00
HEATING/COOL	9	WARM/CL AIR	1.03
FUEL SOURCE	2	GAS	1.00

S	BAT	T	DESCRIPTION	UNITS	YB	ADJ PRICE	RCN
+	LLF	L	LOWER LEVEL FIN	1,428	2022	152.98	218,460
+	BAS	L	BASE AREA	918	2022	313.32	287,631
+	USF	L	UPPER STORY FIN	586	2022	245.91	144,102
B	PTA	N	PATIO	125		21.06	2,632
C	PTA	N	PATIO	576		15.79	9,095
E	BMU	N	BSMT UNFINISHED	190		88.51	16,817
F	LLU	N	LOWER LEVEL UNF	180		126.42	22,755
+	BAS	L	BASE AREA	780	2022	313.32	244,392
G	ASH	N	ATT SHED	260		33.39	8,681
+	WDK	N	WOOD DECK	390		51.90	20,242

TOTAL RCN	999,650

CONDITION ELEM	CD
EXTERIOR	A
INTERIOR	A
KITCHEN	A
BATHS	A
HEAT/ELEC	A

EFF.YR/AGE	2022 / 1	
COND	1	1 %
FUNC	10	UC
ECON	0	
DEPR	11	% GD 89
RCNLD		$889,700