Key: 7373

Town of BREWSTER - Fiscal Year 2025

9/17/2024 2:15 pm SEQ #: 7,603

LEGAL

CURRENT OWNER	PARCEL ID	LOCATION
BULGER RICHARD F & ANN M 128 BEECHTREE DRIVE BREWSTER, MA 02631	83-17-0	128 BEECHTREE DRIVE

TRANSFER HISTORY	DOS	T	SALE PRICE	BK-PG (Cert)
BULGER RICHARD F & ANN M	01/25/1988	XX		6112-335

CLASS	CLASS%	DESCRIPTION	BN ID	BN	CARD
1010	100	SINGLE FAMILY		1	1 of 1

PMT NO	PMT DT	TY	DESC	AMOUNT	INSP	BY	1st	%
421	05/07/2019	7	ALTERATIONS	1,698	07/06/2020	MR	100	100
		12	CYCLICAL NON		05/18/2016	WFF	100	100
NP		12	CYCLICAL NON		01/20/2011	JH	100	100
219	05/17/2010	7	ALTERATIONS	8,300	01/20/2011	JH	100	100
		12	CYCLICAL NON		12/17/2003	JB	100	100

LAND

CD	T	AC/SF/UN	Nbhd	St Ind	Infl	ADJ BASE	SAF	Topo	Lpi	VC	CREDIT AMT	ADJ VALUE
100	S	20,900	17 1.00	A 1.00	A 1.00	252,080	2.14	A 1.00	R05 1.15			258,560

TOTAL	20,909 SF	ZONING	RM	FRNT	0
Nbhd	NBHD 17	NOTE			
St Ind	AVERAGE				
Infl	AVERAGE				

ASSESSED	CURRENT	PREVIOUS
LAND	258,600	243,900
BUILDING	513,900	491,400
DETACHED	10,600	10,300
OTHER	0	0
TOTAL	**783,100**	**745,600**

DETACHED

TY	QUAL	COND	DIM/NOTE	YB	UNITS	ADJ PRICE	RCNLD
PTD	A 1.00	01 1.00	17X10	2000	170	8.55	1,500
PTD	A 1.00	01 1.00	20X20	2000	400	7.65	3,100
HTB	A 1.00	10 0.90		2010	1	4,058.10	3,700
SHF	A 1.00	10 0.90	10X12	2010	120	21.39	2,300

PHOTO 07/06/2020

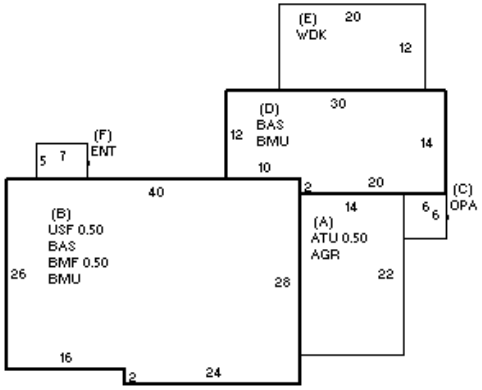

BLDG COMMENTS

BUILDING

BUILDING	CD	ADJ	DESC
MODEL	1		RESIDENTIAL
STYLE	4	1.02	CAPE [100%]
QUALITY	A	1.00	AVG [100%]
FRAME	1	1.00	WD FRAME [100%]

MEASURE	1/20/2011	JH
LIST	5/25/2016	WFF
REVIEW	7/9/2020	MR

YEAR BLT	1988	SIZE ADJ	1.000
NET AREA	2,032	DETAIL ADJ	1.000
$NLA(RCN)	$312	OVERALL	1.020

CAPACITY	UNITS	ADJ
STORIES	1.75	1.00
ROOMS	8	1.00
BEDROOMS	4	1.00
BATHROOMS	3	1.00
FIXTURES	9	$11,934
GARAGE SPACES	0	1.00
% BSMT FIN	0	1.00
# 1/2 BATHS	0	1.00
# OF UNITS	1	1.00

ELEMENT	CD	DESCRIPTION	ADJ
FOUNDATION	4	FLR & WALL	1.00
EXT COVER	1	WD SHINGLE	1.00
ROOF SHAPE	1	GABLE	1.00
ROOF COVER	1	ASPH/CMP SH	1.00
FLOOR COVER	1	HARDWOOD	1.00
INT FINISH	2	DRYWALL	1.00
HEATING/COOL	2	HOT WATER	1.00
FUEL SOURCE	2	GAS	1.00

S	BAT	T	DESCRIPTION	UNITS	YB	ADJ PRICE	RCN
A	AGR	N	ATT GARAGE	308		43.08	13,269
A	ATU	N	ATTIC UNF	154		54.47	8,389
+	BMU	N	BSMT UNFINISHED	1,488		53.68	79,876
B	BMF	N	BSMT FINISH	544		41.14	22,381
+	BAS	L	BASE AREA	1,488	1988	246.40	366,645
B	USF	L	UPPER STORY FIN	544	1988	189.44	103,055
C	OPA	N	OPEN PORCH	36		51.00	1,836
E	WDK	N	WOOD DECK	240		39.98	9,596
F	ENT	N	ENCLOSED ENTRY	35		132.22	4,628
	F21	O	FPL 2S 1OP	1		10,354.00	10,354
	ODS	O	OUTDOOR SHOWER	1		2,463.30	2,463

TOTAL RCN	634,426

CONDITION ELEM	CD
EXTERIOR	G
INTERIOR	A
KITCHEN	A
BATHS	A
HEAT/ELEC	G

EFF.YR/AGE	1995 / 28		
COND	19	19 %	
FUNC	0		
ECON	0		
DEPR	19	% GD	81
RCNLD	$513,900		