Key: 77

Town of BREWSTER - Fiscal Year 2025

9/17/2024 2:15 pm SEQ #: 82

LEGAL

CURRENT OWNER	PARCEL ID	LOCATION
MCDANIEL STEVEN J 116 RIVER STREET LUDLOW, MA 01056	38-17-0	448 PAINES CREEK ROAD

TRANSFER HISTORY	DOS	T	SALE PRICE	BK-PG (Cert)
MCDANIEL STEVEN J	05/28/2004	QS	582,000	18657-292
CROWE IAN S & YVONNE RUTH	05/01/1989	QS	178,000	6718-276

CLASS	CLASS%	DESCRIPTION	BN ID	BN	CARD
1010	100	SINGLE FAMILY		1	1 of 1

PMT NO	PMT DT	TY	DESC	AMOUNT	INSP	BY	1st	%
526	07/15/2015	7	ALTERATIONS	26,800	06/20/2019	NF	100	100
199	04/26/2011	7	ALTERATIONS	5,500	03/23/2012	MR	100	100
259	06/08/2010	7	ALTERATIONS	2,500	03/23/2012	MR	100	100
340	05/17/2007	2	ADD	31,000	10/01/2008	JH	100	100
306	06/21/1996	7	ALTERATIONS	2,000			100	100

LAND

CD	T	AC/SF/UN	Nbhd	St Ind	Infl	ADJ BASE	SAF	Topo	Lpi	VC	CREDIT AMT	ADJ VALUE
100	S	9,900	1 1.00	A 1.00	A 1.00	767,200	4.05	A 1.00	R12 3.50			706,870

TOTAL	9,900 SF	ZONING	RM	FRNT	0
Nbhd	NBHD 1	NOTE			
St Ind	AVERAGE				
Infl	AVERAGE				

ASSESSED	CURRENT	PREVIOUS
LAND	706,900	533,500
BUILDING	343,300	329,000
DETACHED	0	0
OTHER	0	0
TOTAL	**1,050,200**	**862,500**

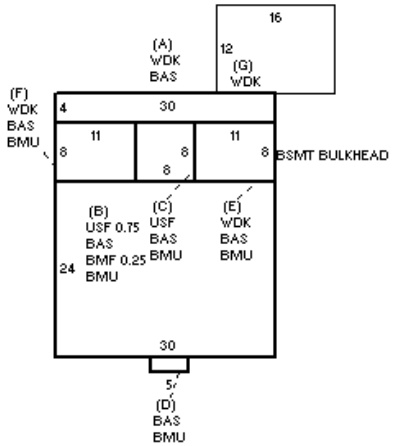

DETACHED

TY	QUAL	COND	DIM/NOTE	YB	UNITS	ADJ PRICE	RCNLD

PHOTO 10/01/2020

BLDG COMMENTS

BUILDING

BUILDING	CD	ADJ	DESC
MODEL	1		RESIDENTIAL
STYLE	4	1.02	CAPE [100%]
QUALITY	A	1.00	AVG [100%]
FRAME	1	1.00	WD FRAME [100%]

MEASURE	10/1/2020	NF
LIST	10/1/2020	EST
REVIEW	10/21/2020	EMZ

YEAR BLT	1966	SIZE ADJ	1.000
NET AREA	1,694	DETAIL ADJ	1.000
$NLA(RCN)	$298	OVERALL	1.020

CAPACITY	UNITS	ADJ
STORIES	1.75	1.00
ROOMS	7	1.00
BEDROOMS	3	1.00
BATHROOMS	2	1.00
FIXTURES	8	$10,608
GARAGE SPACES	0	1.00
% BSMT FIN	25	1.00
# 1/2 BATHS	1	1.00
# OF UNITS	1	1.00

ELEMENT	CD	DESCRIPTION	ADJ
FOUNDATION	4	FLR & WALL	1.00
EXT COVER	1	WD SHINGLE	1.00
ROOF SHAPE	1	GABLE	1.00
ROOF COVER	1	ASPH/CMP SH	1.00
FLOOR COVER	1	HARDWOOD	1.00
INT FINISH	2	DRYWALL	1.00
HEATING/COOL	1	FORCED AIR	1.00
FUEL SOURCE	1	OIL	1.00

S	BAT	T	DESCRIPTION	UNITS	YB	ADJ PRICE	RCN
+	BAS	L	BASE AREA	1,090	1966	266.52	290,502
+	BMU	N	BSMT UNFINISHED	970		60.18	58,375
B	BMF	N	BSMT FINISH	180		41.14	7,405
+	USF	L	UPPER STORY FIN	604	1966	187.52	113,265
+	WDK	N	WOOD DECK	488		39.98	19,513
	MST	O	MAS/METAL STACK	1		5,127.50	5,128

TOTAL RCN	504,795

CONDITION ELEM	CD
EXTERIOR	G
INTERIOR	A
KITCHEN	A
BATHS	A
HEAT/ELEC	A

EFF.YR/AGE	1969 / 54	
COND	32	32 %
FUNC	0	
ECON	0	
DEPR	32	% GD 68
RCNLD		$343,300