Key: 7838

Town of BREWSTER - Fiscal Year 2025

9/17/2024 2:15 pm SEQ #: 8,066

LEGAL

CURRENT OWNER	PARCEL ID	LOCATION
KRIZ RICHARD & BARBARA 108 GREENLAND POND ROAD BREWSTER, MA 02631	83-50-0	108 GREENLAND POND ROAD

TRANSFER HISTORY	DOS	T	SALE PRICE	BK-PG (Cert)
KRIZ RICHARD & BARBARA	09/30/1981	XX		3370-253

CLASS	CLASS%	DESCRIPTION	BN ID	BN	CARD
1010	100	SINGLE FAMILY		1	1 of 1

PMT NO	PMT DT	TY	DESC	AMOUNT	INSP	BY	1st	%
		12	CYCLICAL NON		05/19/2016	WFF	100	100
563	09/04/2007	2	ADD	10,500	07/25/2008	DHT	100	100
763	12/15/2004	2	ADD	20,000	08/13/2007	JH	100	100
		12	CYCLICAL NON		03/15/2004	JB	100	100
586	10/02/2001	2	ADD	250,000	06/11/2002	LB	100	100

LAND

CD	T	AC/SF/UN	Nbhd	St Ind	Infl	ADJ BASE	SAF	Topo	Lpi	VC	CREDIT AMT	ADJ VALUE
100	S	27,700	17 1.00	A 1.00	A 1.00	252,080	1.72	A 1.00	R05 1.15			274,930

TOTAL	27,700 SF	ZONING	RM	FRNT	0
Nbhd	NBHD 17	NOTE			
St Ind	AVERAGE				
Infl	AVERAGE				

ASSESSED	CURRENT	PREVIOUS
LAND	274,900	259,400
BUILDING	1,071,500	1,011,900
DETACHED	7,100	7,100
OTHER	0	0
TOTAL	**1,353,500**	**1,278,400**

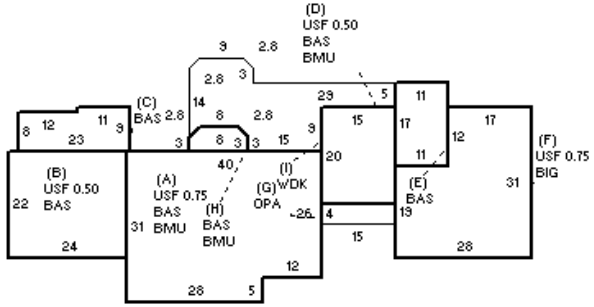

DETACHED

TY	QUAL	COND	DIM/NOTE	YB	UNITS	ADJ PRICE	RCNLD
SHF	V 1.50	01 1.00	12X20	2007	240	29.76	7,100

PHOTO 05/19/2016

BLDG COMMENTS

OUTDOOR SHOWER + 1 FIX

BUILDING

BUILDING	CD	ADJ	DESC
MODEL	1		RESIDENTIAL
STYLE	4	1.02	CAPE [100%]
QUALITY	G	1.30	GOOD [100%]
FRAME	1	1.00	WD FRAME [100%]

MEASURE	5/19/2016	WFF
LIST	8/13/2007	JH
REVIEW		

YEAR BLT	1985	SIZE ADJ	0.970
NET AREA	4,297	DETAIL ADJ	1.000
$NLA(RCN)	$312	OVERALL	1.050

CAPACITY	UNITS	ADJ
STORIES	1.75	1.00
ROOMS	8	1.00
BEDROOMS	3	1.00
BATHROOMS	3	1.00
FIXTURES	13	$23,069
GARAGE SPACES	2	1.00
% BSMT FIN	0	1.00
# 1/2 BATHS	1	1.00
# OF UNITS	1	1.00

ELEMENT	CD	DESCRIPTION	ADJ
FOUNDATION	4	FLR & WALL	1.00
EXT COVER	1	WD SHINGLE	1.00
ROOF SHAPE	1	GABLE	1.00
ROOF COVER	1	ASPH/CMP SH	1.00
FLOOR COVER	1	HARDWOOD	1.00
INT FINISH	2	DRYWALL	1.00
HEATING/COOL	9	WARM/CL AIR	1.03
FUEL SOURCE	1	OIL	1.00

S	BAT	T	DESCRIPTION	UNITS	YB	ADJ PRICE	RCN
+	BMU	N	BSMT UNFINISHED	1,536		69.68	107,032
+	USF	L	UPPER STORY FIN	1,851	1985	203.68	377,014
+	BAS	L	BASE AREA	2,446	1985	293.74	718,489
F	BIG	N	BUILT-IN GARAGE	736		62.97	46,346
G	OPA	N	OPEN PORCH	60		66.20	3,972
I	WDK	N	WOOD DECK	458		51.90	23,772
	F22	O	FPL 2S 2OP	2		16,512.90	33,026
	MST	O	MAS/METAL STACK	1		6,656.00	6,656

TOTAL RCN	1,339,376
CONDITION ELEM	CD
EXTERIOR	G
INTERIOR	G
KITCHEN	A
BATHS	A
HEAT/ELEC	A
EFF.YR/AGE	1993 / 30
COND	20 20 %
FUNC	0
ECON	0
DEPR	20 % GD 80
RCNLD	$1,071,500