Key: 8140

Town of BREWSTER - Fiscal Year 2025

9/17/2024 2:15 pm SEQ #: 8,358

LEGAL

CURRENT OWNER	PARCEL ID	LOCATION
TULLOCH JON P & WENDY A 22 PINE GROVE ROAD BREWSTER, MA 02631	144-34-0	22 PINE GROVE ROAD

TRANSFER HISTORY	DOS	T	SALE PRICE	BK-PG (Cert)
TULLOCH JON P & WENDY A	10/15/1982	XX	60,000	3585-022

CLASS	CLASS%	DESCRIPTION	BN ID	BN	CARD
1010	100	SINGLE FAMILY		1	1 of 1

PMT NO	PMT DT	TY	DESC	AMOUNT	INSP	BY	1st	%
23	01/16/1997	5	OTHER	6,000	03/01/1997		100	100
705	12/11/1995	5	OTHER	2,900	06/06/1996	JB	100	100
198	05/01/1995	2	ADD	65,000	06/06/1996	JB	100	100

LAND

CD	T	AC/SF/UN	Nbhd	St Ind	Infl	ADJ BASE	SAF	Topo	Lpi	VC	CREDIT AMT	ADJ VALUE
100	S	16,675	13 1.00	13H 1.00	A 1.00	252,080	2.58	A 1.00	R05 1.15			248,500

TOTAL	16,675 SF	ZONING	RM	FRNT	0
Nbhd	NBHD 13	NOTE			
St Ind	TIMBERLANE				
Infl	AVERAGE				

ASSESSED	CURRENT	PREVIOUS
LAND	248,500	234,400
BUILDING	350,100	330,600
DETACHED	0	0
OTHER	0	0
TOTAL	**598,600**	**565,000**

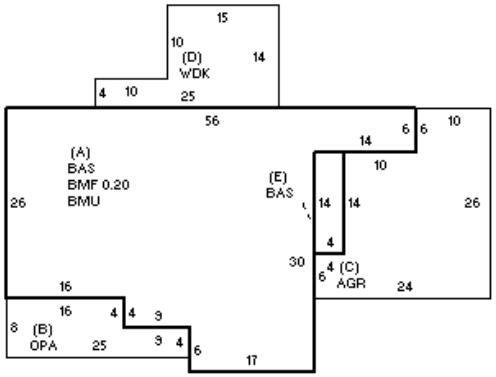

DETACHED

TY	QUAL	COND	DIM/NOTE	YB	UNITS	ADJ PRICE	RCNLD

PHOTO 03/21/2007

BLDG COMMENTS

BUILDING

BUILDING	CD	ADJ	DESC
MODEL	1		RESIDENTIAL
STYLE	1	1.00	RANCH [100%]
QUALITY	A	1.00	AVG [100%]
FRAME	1	1.00	WD FRAME [100%]

MEASURE	3/20/2007	JH
LIST	3/20/2007	JH
REVIEW	3/21/2007	SEJ

YEAR BLT	1973	SIZE ADJ	1.000
NET AREA	1,438	DETAIL ADJ	1.000
$NLA(RCN)	$338	OVERALL	1.000

CAPACITY	UNITS	ADJ
STORIES	1	1.00
ROOMS	6	1.00
BEDROOMS	3	1.00
BATHROOMS	2	1.00
FIXTURES	6	$7,800
GARAGE SPACES	2	1.00
% BSMT FIN	20	1.00
# 1/2 BATHS	0	1.00
# OF UNITS	1	1.00

ELEMENT	CD	DESCRIPTION	ADJ
FOUNDATION	4	FLR & WALL	1.00
EXT COVER	1	WD SHINGLE	1.00
ROOF SHAPE	1	GABLE	1.00
ROOF COVER	1	ASPH/CMP SH	1.00
FLOOR COVER	1	HARDWOOD	1.00
INT FINISH	2	DRYWALL	1.00
HEATING/COOL	2	HOT WATER	1.00
FUEL SOURCE	2	GAS	1.00

S	BAT	T	DESCRIPTION	UNITS	YB	ADJ PRICE	RCN
A	BMU	N	BSMT UNFINISHED	1,382		54.34	75,096
A	BMF	N	BSMT FINISH	276		40.33	11,132
B	OPA	N	OPEN PORCH	164		50.00	8,200
C	AGR	N	ATT GARAGE	484		39.65	19,192
D	WDK	N	WOOD DECK	250		39.20	9,800
+	BAS	L	BASE AREA	1,438	1973	241.57	347,378
	F11	O	FPL 1S 1OP	1		7,637.00	7,637

TOTAL RCN 486,235

CONDITION ELEM	CD
EXTERIOR	A
INTERIOR	A
KITCHEN	G
BATHS	A
HEAT/ELEC	A

EFF.YR/AGE 1977 / 46

COND	28	28 %	
FUNC	0		
ECON	0		
DEPR	28	% GD	72

RCNLD $350,100