Key: 8396

Town of BREWSTER - Fiscal Year 2025

9/17/2024 2:15 pm SEQ #: 8,636

LEGAL

CURRENT OWNER	PARCEL ID	LOCATION
SEAVEY HERMAN F & NANCY-ANN CO-TRUSTEES 52 BETTYS LANE BREWSTER, MA 02631	61-4-0	52 BETTYS LANE

TRANSFER HISTORY	DOS	T	SALE PRICE	BK-PG (Cert)
SEAVEY HERMAN F & NANCY-A	09/06/2018	F	1	(217213)
SEAVEY HERMAN F & NANCY-A	08/24/2001	QS	489,000	(162565)
ROBERTS EDWIN J & SHIRLEY	01/28/1999	F	100	(151821)

CLASS	CLASS%	DESCRIPTION	BN ID	BN	CARD
1010	100	SINGLE FAMILY		1	1 of 1

PMT NO	PMT DT	TY	DESC	AMOUNT	INSP	BY	1st	%
655	07/31/2018	7	ALTERATIONS	3,900	07/18/2019	TCK	100	100

LAND

CD	T	AC/SF/UN	Nbhd	St Ind	Infl	ADJ BASE	SAF	Topo	Lpi	VC	CREDIT AMT	ADJ VALUE
100	S	15,025	13 1.00	A 1.00	A 1.00	295,920	2.81	A 1.00	PV7 1.35			286,920

TOTAL	15,025 SF	ZONING	RL	FRNT	0
Nbhd	NBHD 13	NOTE	POND VIEW		
St Ind	AVERAGE				
Infl	AVERAGE				

ASSESSED	CURRENT	PREVIOUS
LAND	286,900	270,700
BUILDING	412,600	389,700
DETACHED	0	0
OTHER	0	0
TOTAL	**699,500**	**660,400**

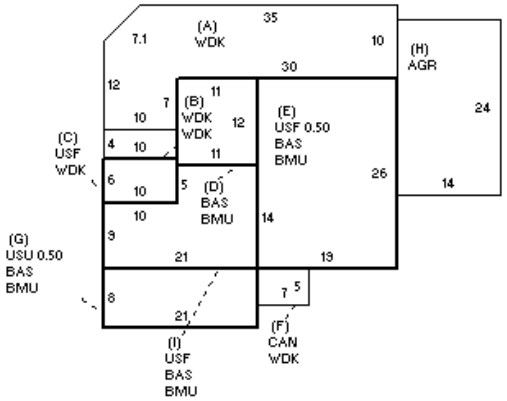

DETACHED

TY	QUAL	COND	DIM/NOTE	YB	UNITS	ADJ PRICE	RCNLD

PHOTO 02/16/2021

BLDG COMMENTS

BUILDING

BUILDING	CD	ADJ	DESC
MODEL	1		RESIDENTIAL
STYLE	8	0.95	CONTEMPOR [100%]
QUALITY	A+	1.20	AVG + [100%]
FRAME	1	1.00	WD FRAME [100%]

MEASURE	2/16/2021	TCK
LIST	9/6/2007	JH
REVIEW	3/18/2021	MR

YEAR BLT	1983	SIZE ADJ	1.000
NET AREA	1,589	DETAIL ADJ	1.000
$NLA(RCN)	$346	OVERALL	0.930

CAPACITY	UNITS	ADJ
STORIES	1.75	1.00
ROOMS	6	1.00
BEDROOMS	3	1.00
BATHROOMS	2	1.00
FIXTURES	6	$8,705
GARAGE SPACES	0	1.00
% BSMT FIN	0	1.00
# 1/2 BATHS	0	1.00
# OF UNITS	1	1.00

ELEMENT	CD	DESCRIPTION	ADJ
FOUNDATION	4	FLR & WALL	1.00
EXT COVER	10	VERT BOARD	0.98
ROOF SHAPE	1	GABLE	1.00
ROOF COVER	1	ASPH/CMP SH	1.00
FLOOR COVER	3	W/W CARPET	1.00
INT FINISH	2	DRYWALL	1.00
HEATING/COOL	2	HOT WATER	1.00
FUEL SOURCE	2	GAS	1.00

S	BAT	T	DESCRIPTION	UNITS	YB	ADJ PRICE	RCN
+	WDK	N	WOOD DECK	633		43.75	27,692
+	USF	L	UPPER STORY FIN	551	1983	207.27	114,205
+	BMU	N	BSMT UNFINISHED	1,038		63.01	65,408
+	BAS	L	BASE AREA	1,038	1983	291.60	302,680
F	CAN	N	CANOPY	35		52.01	1,820
G	USU	N	UPPER STORY UNF	84		62.97	5,290
H	AGR	N	ATT GARAGE	336		47.14	15,838
	F11	O	FPL 1S 1OP	1		8,522.90	8,523

TOTAL RCN	550,161

CONDITION ELEM	CD
EXTERIOR	A
INTERIOR	A
KITCHEN	A
BATHS	A
HEAT/ELEC	A

EFF.YR/AGE	1983 / 40		
COND	25	25 %	
FUNC	0		
ECON	0		
DEPR	25	% GD	75
RCNLD	$412,600		