**Key: 1394**

# Town of CHATHAM - Fiscal Year 2024

9/7/2023 9:38 am SEQ #: 1.519

## LEGAL

| CURRENT OWNER | PARCEL ID | LOCATION |
|---|---|---|
| COVE HILL RD REALTY TRUST<br>DREW JOHN E & KATHLEEN M TRSTES<br>73 BURDITT AVE<br>HINGHAM, MA 02043-1833 | 12J-30-G16 | 38 COVE HILL RD |

| TRANSFER HISTORY | DOS | T | SALE PRICE | BK-PG (Cert) |
|---|---|---|---|---|
| COVE HILL RD REALTY TRUST | 12/10/1999 | QS | 895,000 | (155836) |
| ADELIA TRUST | 04/29/1988 | A | 1 | (114081) |
| N/A | 06/01/1975 | N | 1 | (14081) |

| CLASS | CLASS% | DESCRIPTION | BN ID | BN | CARD |
|---|---|---|---|---|---|
| 1010 | 100 | SINGLE FAMILY | | 1 | 1 of 1 |

| PMT NO | PMT DT | TY | DESC | AMOUNT | INSP | BY | 1st | % |
|---|---|---|---|---|---|---|---|---|
| 22-014 | 01/06/2022 | 10 | Reroof | 17,850 | | | 100 | 100 |
| 17-189 | 03/21/2017 | 4 | Outbuildings | 75,000 | 07/20/2018 | NF | 100 | 100 |
| SP16=100 | 02/03/2017 | 3 | Renovations | | 07/20/2018 | NF | 100 | 100 |
| | 04/06/2007 | 50 | Meas & List | | | RRC | 100 | 100 |
| | 02/13/2003 | 50 | Meas & List | | | JB | 100 | 100 |

## LAND

| CD | T | AC/SF/UN | Nbhd | | Infl1 | | Infl2 | | ADJ BASE | SAF | Infl3 | | Lpi | | VC | CREDIT AMT | ADJ VALUE |
|---|---|---|---|---|---|---|---|---|---|---|---|---|---|---|---|---|---|
| 100 | S | 40,000 | NC | 1.00 | 100 | 1.00 | 100 | 1.00 | 1,282,750 | 1.00 | 100 | 1.00 | CF1 | 3.50 | | | 1,177,920 |
| 300 | A | 0.331 | NC | 1.00 | 100 | 1.00 | 100 | 1.00 | 67,200 | 1.00 | 100 | 1.00 | CF1 | 3.50 | | | 22,240 |

| TOTAL | 1.249 Acres | ZONING | R40 | FRNT | 0 |
|---|---|---|---|---|---|
| Nbhd | NORTH CHATHAM | NOTE | | | |
| Infl1 | 100 | | | | |
| Infl2 | 100 | | | | |

| ASSESSED | CURRENT | PREVIOUS |
|---|---|---|
| LAND | 1,200,200 | 1,000,100 |
| BUILDING | 3,403,800 | 2,933,800 |
| DETACHED | 159,900 | 156,700 |
| OTHER | 0 | 0 |
| TOTAL | **4,763,900** | **4,090,600** |

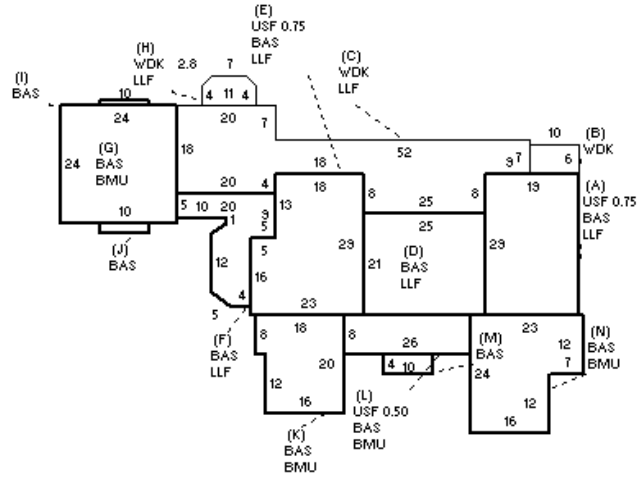


## DETACHED

| TY | QUAL | | COND | | DIM/NOTE | YB | UNITS | ADJ PRICE | RCNLD |
|---|---|---|---|---|---|---|---|---|---|
| DGF | A | 1.00 | 50 | 0.50 | | 1983 | 220 | 52.38 | 5,800 |
| DGF | A | 1.00 | 20 | 0.80 | | 1983 | 576 | 42.32 | 19,500 |
| CBH | A | 1.00 | 20 | 0.80 | | 1988 | 200 | 31.00 | 5,000 |
| DCK | A | 1.00 | 20 | 0.80 | 3X63 | 1988 | 189 | 668.43 | 101,100 |
| IPG | A | 1.00 | 10 | 0.90 | 19X33 | 2002 | 627 | 39.48 | 22,300 |
| WDK | A | 1.00 | 10 | 0.90 | 10X20 | 2017 | 200 | 16.60 | 3,000 |
| PTD | A | 1.00 | 30 | 0.70 | 8X10 | | 80 | 11.30 | 600 |
| STR | A | 1.00 | 10 | 0.90 | 3X32 | 2000 | 96 | 30.00 | 2,600 |

PHOTO 01/10/2018

BLDG COMMENTS

LLF=3 RMS,2BDRM,1FBTH

## BUILDING

| BUILDING | CD | ADJ | DESC | MEASURE | | |
|---|---|---|---|---|---|---|
| MODEL | 1 | | RESIDENTIAL | | | |
| STYLE | 4 | 1.00 | CAPE [100%] | LIST | | |
| QUALITY | V | 2.35 | VERY GOOD [100%] | | | |
| FRAME | 1 | 1.00 | WOOD FRAME [100%] | REVIEW | 7/31/2018 | TD |

| YEAR BLT | 1972 | SIZE ADJ | 1.000 |
|---|---|---|---|
| NET AREA | 4,557 | DETAIL ADJ | 1.050 |
| $NLA(RCN) | $869 | OVERALL | 1.000 |

| CAPACITY | UNITS | ADJ |
|---|---|---|
| STORIES | 1.75 | 1.00 |
| ROOMS | 11 | 1.00 |
| BEDROOMS | 5 | 1.00 |
| FULL BATHS | 5 | 1.00 |
| 1/2 BATHS | 0 | 1.00 |
| FIXTURES | 22 | $43,428 |
| UNITS | 1 | 1.00 |

| ELEMENT | CD | DESCRIPTION | ADJ |
|---|---|---|---|
| FOUNDATION | 4 | FLR & WALL | 1.00 |
| EXT. COVER | 1 | WOOD SHINGLE | 1.00 |
| ROOF SHAPE | 1 | GABLE | 1.00 |
| ROOF COVER | 1 | ASPH/CMP SHIN | 1.00 |
| FLOOR COVER | 16 | HARDWD/OTHER | 1.00 |
| INT. FINISH | 2 | DRYWALL | 1.00 |
| HEATING/COOL | 10 | HOT/COOL WATER | 1.05 |
| FUEL SOURCE | 1 | OIL | 1.00 |

| S | BAT | T | DESCRIPTION | UNITS | YB | ADJ PRICE | RCN |
|---|---|---|---|---|---|---|---|
| + | LLF | N | LOWER LEVEL FIN | 2,916 | | 386.98 | 1,128,442 |
| + | USF | L | UP-STRY FIN | 969 | 1972 | 446.20 | 432,365 |
| + | WDK | N | WOOD DECK | 1,046 | | 137.24 | 143,552 |
| + | BMU | N | BSMT UNFINISHED | 1,588 | | 155.55 | 247,006 |
| G | BAS | L | BAS AREA | 576 | 2000 | 525.85 | 302,887 |
| + | BAS | L | BAS AREA | 3,012 | 1972 | 525.85 | 1,583,851 |
| | BMG | O | BSMT GARAGE | 2 | | 6,508.35 | 13,017 |
| | F21 | O | FPL 2S 1OP | 2 | | 24,383.60 | 48,767 |
| | GFP | O | GAS LOG/FP/E FP | 1 | | 14,621.70 | 14,622 |

| TOTAL RCN | 3,957,936 |
|---|---|

| CONDITION ELEM | CD |
|---|---|
| EXTERIOR | G |
| INTERIOR | G |
| KITCHEN | G |
| BATHS | G |
| HEAT | U |
| ELECT | U |

| EFF.YR/AGE | 2008 / 14 | | |
|---|---|---|---|
| COND | 14 | 14 % | |
| FUNC | 0 | | |
| ECON | 0 | | |
| DEPR | 14 | % GD | 86 |
| RCNLD | | | $3,403,800 |