Key: 2149

Town of CHATHAM - Fiscal Year 2024

9/7/2023 9:38 am SEQ #: 2,325

LEGAL

CURRENT OWNER	PARCEL ID	LOCATION
DAVID E WILBER REVOCABLE TRUST 1/2 NANCY J WILBER REVOCABLE TRUST 1/2 336 STAGE ISLAND RD CHATHAM, MA 02633	14A2-13-D34	336 STAGE ISLAND RD

TRANSFER HISTORY	DOS	T	SALE PRICE	BK-PG (Cert)
DAVID E WILBER REVOCABLE	11/13/2013	A	1	(202000)
WILBER DAVID E & NANCY J	06/16/1999	N	505,000	(153566)
KENNEDY	04/06/1989	A	1	(117220)

CLASS	CLASS%	DESCRIPTION	BN ID	BN	CARD
1010	100	SINGLE FAMILY		1	1 of 1

PMT NO	PMT DT	TY	DESC	AMOUNT	INSP	BY	1st	%
18-934	11/09/2018	3	Renovations	1,500	03/04/2019	TCK	100	100
	02/03/2009	50	Meas & List			RRC	100	100
08-357	08/14/2008	4	Outbuildings	3,000	02/03/2009		100	100
00-273	06/01/2000	2	Additions	90,000			100	100
00-004	01/01/2000	3	Renovations	60,000			100	100

LAND

CD	T	AC/SF/UN	Nbhd	Infl1	Infl2	ADJ BASE	SAF	Infl3	Lpi	VC	CREDIT AMT	ADJ VALUE
100	S	40,000	MOR 1.00	100 1.00	100 1.00	1,172,800	1.00	100 1.00	WV8 3.20			1,076,950
300	A	0.151	MOR 1.00	100 1.00	100 1.00	61,440	1.00	100 1.00	WV8 3.20			9,280

TOTAL	1.069 Acres	ZONING	R40	FRNT	0

Nbhd	MORRIS ISLAND
Infl1	100
Infl2	100

NOTE

ASSESSED	CURRENT	PREVIOUS
LAND	1,086,200	905,100
BUILDING	788,800	717,600
DETACHED	1,100	1,000
OTHER	0	0
TOTAL	**1,876,100**	**1,623,700**

DETACHED

TY	QUAL	COND	DIM/NOTE	YB	UNITS	ADJ PRICE	RCNLD
SHF	A 1.00	10 0.90	8X10	2008	80	15.24	1,100

PHOTO 03/04/2019

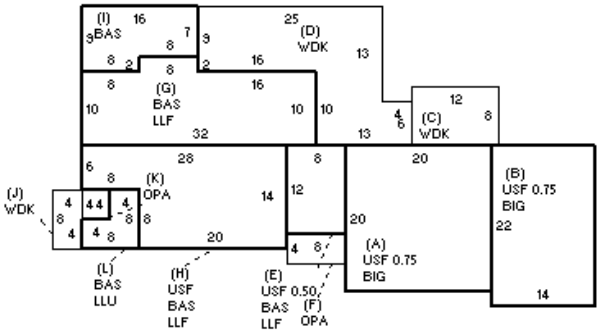

BLDG COMMENTS

BUILDING

BUILDING	CD	ADJ	DESC
MODEL	1		RESIDENTIAL
STYLE	4	1.00	CAPE [100%]
QUALITY	G	1.55	GOOD [100%]
FRAME	1	1.00	WOOD FRAME [100%]

MEASURE		
LIST		
REVIEW	6/4/2019	TD

YEAR BLT	1980	SIZE ADJ	1.000
NET AREA	1,843	DETAIL ADJ	1.030
$NLA(RCN)	$549	OVERALL	1.000

CAPACITY	UNITS	ADJ
STORIES	1.75	1.00
ROOMS	0	1.00
BEDROOMS	3	1.00
FULL BATHS	2	1.00
1/2 BATHS	0	1.00
FIXTURES	6	$7,663
UNITS	1	1.00

ELEMENT	CD	DESCRIPTION	ADJ
FOUNDATION	4	FLR & WALL	1.00
EXT. COVER	1	WOOD SHINGLE	1.00
ROOF SHAPE	1	GABLE	1.00
ROOF COVER	1	ASPH/CMP SHIN	1.00
FLOOR COVER	36	CARPET/OTHER	1.00
INT. FINISH	2	DRYWALL	1.00
HEATING/COOL	9	WARM/COOL AIR	1.03
FUEL SOURCE	2	GAS	1.00

S	BAT	T	DESCRIPTION	UNITS	YB	ADJ PRICE	RCN
+	BIG	N	BUILT-IN GARAGE	708		117.45	83,158
+	USF	L	UP-STRY FIN	531	2000	317.05	168,355
+	WDK	N	WOOD DECK	467		90.52	42,273
+	LLF	N	LOWER LEVEL FIN	760		274.98	208,982
+	USF	L	UP-STRY FIN	376	1980	317.05	119,212
+	OPA	N	OPEN PORCH	48		117.96	5,662
+	BAS	L	BAS AREA	936	1980	373.65	349,734
L	LLU	N	LOWER LEVEL UN	48		210.54	10,106
	F21	O	FPL 2S 1OP	1		16,082.80	16,083

TOTAL RCN	1,011,228

CONDITION ELEM	CD
EXTERIOR	
INTERIOR	
KITCHEN	
BATHS	
HEAT	
ELECT	

EFF.YR/AGE	1997 / 25		
COND	22	22 %	
FUNC	0		
ECON	0		
DEPR	22	% GD	78
RCNLD			$788,800