Key: 2936

Town of CHATHAM - Fiscal Year 2024

9/7/2023 9:38 am SEQ #: 3.169

LEGAL

CURRENT OWNER	PARCEL ID	LOCATION
ROBERT A CULNANE TRUST OF 2013 NOW 134 SEAGULL LANE LLC 4650 HAMILTON TER VERO BEACH, FL 32967	15A1-25-H32	134 SEAGULL RD

TRANSFER HISTORY	DOS	T	SALE PRICE	BK-PG (Cert)
134 SEAGULL LANE LLC	07/17/2023	B	1	(233445)
ROBERT A CULNANE TRUST OF	12/11/2013	A	1	(202235)
CULNANE ROBERT A	01/31/1991	L	332,000	(122601)

CLASS	CLASS%	DESCRIPTION	BN ID	BN	CARD
1010	100	SINGLE FAMILY		1	1 of 1

PMT NO	PMT DT	TY	DESC	AMOUNT	INSP	BY	1st	%
		8	Cyc. Reinsp.		12/28/2021	NF	100	100
	01/31/2011	50	Meas & List			CE	100	100
10-083	03/19/2010	14	DECK	10,000	01/31/2011		100	100
10-038	02/08/2010	3	Renovations	30,000	01/31/2011		100	100
	03/24/2008	50	Meas & List			RRC	100	100

LAND

CD	T	AC/SF/UN	Nbhd	Infl1	Infl2	ADJ BASE	SAF	Infl3	Lpi	VC	CREDIT AMT	ADJ VALUE
100	S	16,534	CH 1.00	100 1.00	100 1.00	1,099,500	2.09	100 1.00	WV5 3.00			870,350

TOTAL	16,534 SF	ZONING	R40	FRNT	0
Nbhd	CHATHAM	NOTE	Dist Harbor View		
Infl1	100				
Infl2	100				

ASSESSED	CURRENT	PREVIOUS
LAND	870,400	725,300
BUILDING	587,100	534,200
DETACHED	4,600	4,400
OTHER	0	0
TOTAL	**1,462,100**	**1,263,900**

DETACHED

TY	QUAL	COND	DIM/NOTE	YB	UNITS	ADJ PRICE	RCNLD
HTB	A 1.00	30 0.70			1	6,564.90	4,600

PHOTO 12/28/2021

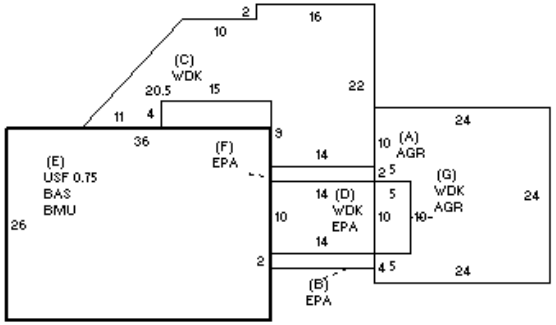

BLDG COMMENTS

BUILDING

BUILDING	CD	ADJ	DESC
MODEL	1		RESIDENTIAL
STYLE	4	1.00	CAPE [100%]
QUALITY	+	1.20	PLUS AVE [100%]
FRAME	1	1.00	WOOD FRAME [100%]

MEASURE	12/28/2021	NF
LIST	12/28/2021	EST
REVIEW	2/22/2022	EMZ

YEAR BLT	1960	SIZE ADJ	1.000
NET AREA	1,638	DETAIL ADJ	1.060
$NLA(RCN)	$448	OVERALL	1.000

CAPACITY	UNITS	ADJ
STORIES	1.75	1.00
ROOMS	6	1.00
BEDROOMS	3	1.00
FULL BATHS	1	1.00
1/2 BATHS	1	1.00
FIXTURES	6	$6,106
UNITS	1	1.00

ELEMENT	CD	DESCRIPTION	ADJ
FOUNDATION	4	FLR & WALL	1.00
EXT. COVER	1	WOOD SHINGLE	1.00
ROOF SHAPE	6	SALTBOX	1.00
ROOF COVER	2	WOOD SHIN	1.01
FLOOR COVER	16	HARDWD/OTHER	1.00
INT. FINISH	2	DRYWALL	1.00
HEATING/COOL	11	HT-WT/COOL AIR	1.05
FUEL SOURCE	2	GAS	1.00

S	BAT	T	DESCRIPTION	UNITS	YB	ADJ PRICE	RCN
+	AGR	N	ATTACHED GARAGE	576		92.60	53,339
+	EPA	N	ENCL PORCH	196		160.44	31,446
+	WDK	N	WOOD DECK	727		70.08	50,948
E	BMU	N	BSMT UNFINISHED	936		88.20	82,553
E	BAS	L	BAS AREA	936	1960	323.37	302,670
E	USF	L	UP-STRY FIN	702	1960	274.39	192,619
	F21	O	FPL 2S 1OP	1		12,451.20	12,451
	ODS	O	OUT DOOR SHWR-A	1		1,772.40	1,772

TOTAL RCN	733,904

CONDITION ELEM	CD
EXTERIOR	G
INTERIOR	G
KITCHEN	G
BATHS	G
HEAT	U
ELECT	U

EFF.YR/AGE	2002 / 20	
COND	20	20 %
FUNC	0	
ECON	0	
DEPR	20	% GD 80
RCNLD		$587,100