Key: 310

Town of CHATHAM - Fiscal Year 2024

9/7/2023 9:38 am SEQ #: 360

LEGAL

CURRENT OWNER	PARCEL ID	LOCATION
KAHN SUSAN & C RONALD **64 VALENTINE PARK** **W NEWTON, MA 02465**	**10F-7-R1**	**33 SKY WAY**

TRANSFER HISTORY	DOS	T	SALE PRICE	BK-PG (Cert)
KAHN SUSAN & C RONALD	12/15/2009	QS	845,000	24237-30
DIXON KEVIN T & KATHERINE	12/01/1985	QS	73,000	4856-194

CLASS	CLASS%	DESCRIPTION	BN ID	BN	CARD
1010	100	SINGLE FAMILY		1	1 of 1

PMT NO	PMT DT	TY	DESC	AMOUNT	INSP	BY	1st	%
	05/08/2007	50	Meas & List			RRC	100	100

LAND

CD	T	AC/SF/UN	Nbhd	Infl1	Infl2	ADJ BASE	SAF	Infl3	Lpi	VC	CREDIT AMT	ADJ VALUE
100	S	23,100	MC 1.00	100 1.00	100 1.00	733,000	1.57	100 1.00	PF5 2.00			611,560

TOTAL	23,100 SF	ZONING	R20	FRNT	0

Nbhd	MID CHATHAM
Infl1	100
Infl2	100

NOTE: PONDFRONT Deeded Rts PL404/28 Lot A Rec Area
WhitePond K7993

ASSESSED	CURRENT	PREVIOUS
LAND	611,600	509,600
BUILDING	386,300	356,200
DETACHED	5,800	5,600
OTHER	0	0
TOTAL	**1,003,700**	**871,400**

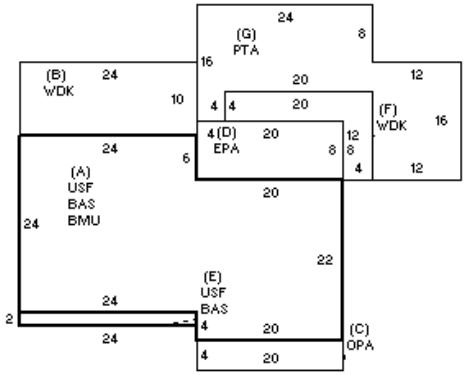

DETACHED

TY	QUAL	COND	DIM/NOTE	YB	UNITS	ADJ PRICE	RCNLD
PDK	V 1.50	30 0.70	12X8		1	3,340.65	2,300
STR	A 1.00	30 0.70	56X3		168	30.00	3,500

PHOTO 12/10/2019

BLDG COMMENTS

BUILDING

BUILDING	CD	ADJ	DESC
MODEL	1		RESIDENTIAL
STYLE	3	0.80	SPLIT LEVEL [100%]
QUALITY	A	1.00	AVERAGE [100%]
FRAME	1	1.00	WOOD FRAME [100%]

MEASURE	12/10/2019	NF
LIST	12/10/2019	EST
REVIEW	1/14/2020	MR

YEAR BLT	1987	SIZE ADJ	1.000
NET AREA	2,128	DETAIL ADJ	0.800
$NLA(RCN)	$245	OVERALL	1.000

CAPACITY	UNITS	ADJ
STORIES	2	1.00
ROOMS	8	1.00
BEDROOMS	4	1.00
FULL BATHS	2	1.00
1/2 BATHS	0	1.00
FIXTURES	6	$3,840
UNITS	1	1.00

ELEMENT	CD	DESCRIPTION	ADJ
FOUNDATION	4	FLR & WALL	1.00
EXT. COVER	1	WOOD SHINGLE	1.00
ROOF SHAPE	1	GABLE	1.00
ROOF COVER	1	ASPH/CMP SHIN	1.00
FLOOR COVER	1	HARDWOOD	1.00
INT. FINISH	2	DRYWALL	1.00
HEATING/COOL	2	HOT WATER	1.00
FUEL SOURCE	1	OIL	1.00

S	BAT	T	DESCRIPTION	UNITS	YB	ADJ PRICE	RCN
A	BMU	N	BSMT UNFINISHED	1,016		72.11	73,259
+	USF	L	UP-STRY FIN	1,064	1987	164.35	174,871
+	WDK	N	WOOD DECK	352		58.40	20,557
C	OPA	N	OPEN PORCH	80		76.10	6,088
D	EPA	N	ENCL PORCH	160		133.70	21,392
+	BAS	L	BAS AREA	1,064	1987	193.69	206,086
G	PTA	N	PATIO/STOOP	496		17.90	8,878
	BMG	O	BSMT GARAGE	2		2,769.50	5,539
	ODS	O	OUT DOOR SHWR-A	1		1,477.00	1,477

TOTAL RCN	521,987

CONDITION ELEM	CD
EXTERIOR	A
INTERIOR	A
KITCHEN	A
BATHS	A
HEAT	A
ELECT	A

EFF.YR/AGE	1987 / 35	
COND	26	26 %
FUNC	0	
ECON	0	
DEPR	26	% GD 74
RCNLD		$386,300