Key: 4135

Town of CHATHAM - Fiscal Year 2024

9/7/2023 9:38 am SEQ #: 4,537

LEGAL

CURRENT OWNER	PARCEL ID	LOCATION
CORDIANO WILLIAM M & SANDRA A 21 WATERBURY WAY POUND RIDGE, NY 10576-2022	17C-51-C13	26 WATCH HILL WAY

TRANSFER HISTORY	DOS	T	SALE PRICE	BK-PG (Cert)
CORDIANO WILLIAM M & SAND	07/15/2014	QS	1,897,500	28263-206
HYNES III JOHN B	08/31/2011	QS	2,000,000	25654-97
KATHLEEN G RAUSCH TRUST	07/07/2006	A	1	21168-100

CLASS	CLASS%	DESCRIPTION	BN ID	BN	CARD
1010	100	SINGLE FAMILY		1	1 of 1

PMT NO	PMT DT	TY	DESC	AMOUNT	INSP	BY	1st	%
22-127	01/12/2023	75	SPECIAL PERM				100	100
14-520	09/11/2014	10	Reroof	35,000	04/28/2015	MW	100	100
	04/07/2008	50	Meas & List			RRC	100	100
07-556	11/14/2007	2	Additions	125,000	04/07/2008		100	100
	01/27/2006	50	Meas & List			JB	100	100

LAND

CD	T	AC/SF/UN	Nbhd	Infl1	Infl2	ADJ BASE	SAF	Infl3	Lpi	VC	CREDIT AMT	ADJ VALUE
100	S	19,800	CH 1.00	100 1.00	100 1.00	2,382,250	1.79	100 1.00	R12 6.50			1,939,150

TOTAL	19,800 SF	ZONING	R40	FRNT	0
Nbhd	CHATHAM	NOTE			
Infl1	100				
Infl2	100				

ASSESSED	CURRENT	PREVIOUS
LAND	1,939,200	1,615,900
BUILDING	1,252,200	1,137,900
DETACHED	1,100	1,000
OTHER	0	0
TOTAL	**3,192,500**	**2,754,800**

DETACHED

TY	QUAL	COND	DIM/NOTE	YB	UNITS	ADJ PRICE	RCNLD
SHF	A 1.00	10 0.90		2000	80	15.24	1,100

PHOTO 01/27/2022

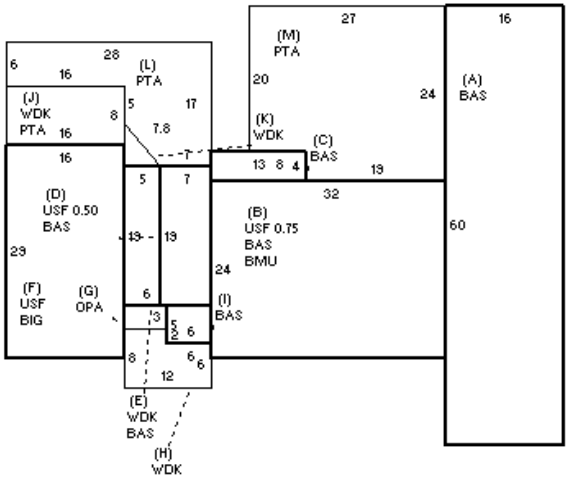

BUILDING

BUILDING	CD	ADJ	DESC
MODEL	1		RESIDENTIAL
STYLE	4	1.00	CAPE [100%]
QUALITY	G	1.55	GOOD [100%]
FRAME	1	1.00	WOOD FRAME [100%]

MEASURE	1/27/2022	NF
LIST	1/27/2022	EST
REVIEW	2/10/2022	EMZ

BLDG COMMENTS

YEAR BLT	1950	SIZE ADJ	1.000
NET AREA	3,145	DETAIL ADJ	1.040
$NLA(RCN)	$433	OVERALL	1.000

CAPACITY	UNITS	ADJ
STORIES	1.75	1.00
ROOMS	7	1.00
BEDROOMS	3	1.00
FULL BATHS	3	1.00
1/2 BATHS	1	1.00
FIXTURES	13	$16,765
UNITS	1	1.00

ELEMENT	CD	DESCRIPTION	ADJ
FOUNDATION	4	FLR & WALL	1.00
EXT. COVER	1	WOOD SHINGLE	1.00
ROOF SHAPE	1	GABLE	1.00
ROOF COVER	2	WOOD SHIN	1.01
FLOOR COVER	13	HARDWD/CARPET	1.00
INT. FINISH	2	DRYWALL	1.00
HEATING/COOL	9	WARM/COOL AIR	1.03
FUEL SOURCE	2	GAS	1.00

S	BAT	T	DESCRIPTION	UNITS	YB	ADJ PRICE	RCN
A	BAS	L	BAS AREA	960	2000	369.14	354,378
B	BMU	N	BSMT UNFINISHED	768		120.07	92,214
+	USF	L	UP-STRY FIN	643	1950	313.23	201,407
+	BAS	L	BAS AREA	983	1950	369.14	362,869
E	BAS	L	BAS AREA	95	2007	369.15	35,069
F	BIG	N	BUILT-IN GARAGE	464		122.44	56,814
F	USF	L	UP-STRY FIN	464	2007	313.23	145,339
G	OPA	N	OPEN PORCH	18		117.97	2,124
+	WDK	N	WOOD DECK	322		90.52	29,148
+	PTA	N	PATIO/STOOP	1,029		27.74	28,550
	F11	O	FPL 1S 1OP	1		11,589.40	11,589
	F22	O	FPL 2S 2OP	1		22,521.50	22,522
	GEN	O	GENERATOR	1		0.00	
	ODS	O	OUT DOOR SHWR-A	1		2,289.40	2,289

TOTAL RCN	1,361,076
CONDITION ELEM	CD
EXTERIOR	G
INTERIOR	G
KITCHEN	V
BATHS	V
HEAT	U
ELECT	U
EFF.YR/AGE	2014 / 8
COND	8 8 %
FUNC	0
ECON	0
DEPR	8 % GD 92
RCNLD	$1,252,200