Key: 4189

Town of CHATHAM - Fiscal Year 2024

9/7/2023 9:38 am SEQ #: 4,593

LEGAL

CURRENT OWNER	PARCEL ID	LOCATION
BARRY KEVIN M & PATRICIA J 21 BRIMMER ST BOSTON, MA 02108	1A-2-S1	110 SEA SHELLS DR

TRANSFER HISTORY	DOS	T	SALE PRICE	BK-PG (Cert)
BARRY KEVIN M & PATRICIA	11/15/2016	QS	1,895,000	(211312)
DICKIE LAURIE	06/25/2012	H		(D1194864)
GOODHALL RUTH TRUSTEE	09/01/2006	A	1	(181012)

CLASS	CLASS%	DESCRIPTION	BN ID	BN	CARD
1010	100	SINGLE FAMILY		1	1 of 1

PMT NO	PMT DT	TY	DESC	AMOUNT	INSP	BY	1st	%
19-879	12/09/2019	4	Outbuildings	26,000	01/23/2020	NF	100	100
19-079	02/11/2019	77	SOLAR PANELS	48,000	01/15/2020	MR	100	100
18-984	11/26/2018	3	Renovations	10,000	01/23/2020	NF	100	100
18-653	08/20/2018	3	Renovations	1,700,000	01/23/2020	NF	100	100
12-192	04/18/2012	10	Reroof	6,500	06/26/2013	SF	100	100

LAND

CD	T	AC/SF/UN	Nbhd	Infl1	Infl2	ADJ BASE	SAF	Infl3	Lpi	VC	CREDIT AMT	ADJ VALUE
100	S	26,098	SC 1.00	90 0.90	100 1.00	2,473,875	1.42	100 1.00	WF4 7.50			2,105,860

TOTAL	26,098 SF	ZONING	R20	FRNT	0

Nbhd	SOUTH CHATHAM
Infl1	90
Infl2	100

NOTE: INFL=SLOPE/EROSION. ASSOC BEACH RIGHTS DOC#263621

ASSESSED	CURRENT	PREVIOUS
LAND	2,105,900	1,754,800
BUILDING	2,322,100	2,113,500
DETACHED	8,900	8,500
OTHER	0	0
TOTAL	**4,436,900**	**3,876,800**

DETACHED

TY	QUAL	COND	DIM/NOTE	YB	UNITS	ADJ PRICE	RCNLD
SHF	G 1.20	10 0.90	7X5	2019	35	19.50	600
STR	A 1.00	10 0.90	22X4	2019	88	30.00	2,400
HTB	A 1.00	10 0.90		2019	1	6,564.90	5,900

PHOTO 01/23/2020

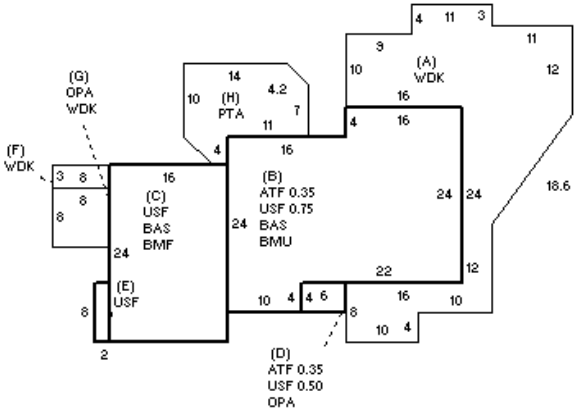

BUILDING

BUILDING	CD	ADJ	DESC
MODEL	1		RESIDENTIAL
STYLE	8	0.95	CONTEMPORARY [100%]
QUALITY	E	3.50	EXCELLENT [100%]
FRAME	1	1.00	WOOD FRAME [100%]

MEASURE	1/23/2020	NF
LIST	1/28/2019	TCK
REVIEW	2/20/2020	MR

BLDG COMMENTS

31 SOLAR PANELS

YEAR BLT	1982	SIZE ADJ	1.000
NET AREA	2,367	DETAIL ADJ	0.978
$NLA(RCN)	$991	OVERALL	1.000

CAPACITY	UNITS	ADJ
STORIES	2	1.00
ROOMS	7	1.00
BEDROOMS	3	1.00
FULL BATHS	2	1.00
1/2 BATHS	1	1.00
FIXTURES	10	$27,384
UNITS	1	1.00

ELEMENT	CD	DESCRIPTION	ADJ
FOUNDATION	4	FLR & WALL	1.00
EXT. COVER	1	WOOD SHINGLE	1.00
ROOF SHAPE	1	GABLE	1.00
ROOF COVER	1	ASPH/CMP SHIN	1.00
FLOOR COVER	1	HARDWOOD	1.00
INT. FINISH	2	DRYWALL	1.00
HEATING/COOL	9	WARM/COOL AIR	1.03
FUEL SOURCE	2	GAS	1.00

S	BAT	T	DESCRIPTION	UNITS	YB	ADJ PRICE	RCN
+	WDK	N	WOOD DECK	763		204.40	155,957
B	BMU	N	BSMT UNFINISHED	744		273.56	203,532
+	BAS	L	BAS AREA	1,128	1982	814.94	919,251
+	ATF	L	FINISHED ATTIC	269	1982	490.20	131,863
C	BMF	N	BSMT FINISH-SEP	384		380.10	145,957
+	OPA	N	OPEN PORCH	88		266.36	23,440
+	USF	L	UP-STRY FIN	970	1982	691.50	670,754
H	PTA	N	PATIO/STOOP	182		62.65	11,403
	F22	O	FPL 2S 2OP	1		50,855.00	50,855
	ODS	O	OUT DOOR SHWR-A	1		5,169.50	5,170

TOTAL RCN	2,345,564

CONDITION ELEM	CD
EXTERIOR	V
INTERIOR	V
KITCHEN	V
BATHS	V
HEAT	U
ELECT	U

EFF.YR/AGE	2021 / 1		
COND	1 1 %		
FUNC	0		
ECON	0		
DEPR	1	% GD	99
RCNLD	$2,322,100		