**Key: 4339**

# Town of CHATHAM - Fiscal Year 2024

9/7/2023 9:38 am SEQ #: 4,755

## LEGAL

| CURRENT OWNER | PARCEL ID | LOCATION |
|---|---|---|
| **PERKINS TIDES LLC**<br>**2 LAKE RD**<br>**WELLESLEY, MA 02482-4328** | **2A-90-PE8** | **51 PERKINS DR** |

| TRANSFER HISTORY | DOS | T | SALE PRICE | BK-PG (Cert) |
|---|---|---|---|---|
| PERKINS TIDES LLC | 02/13/2017 | V | | 30294-209 |
| DELTA PORTUNUS CORPORATIO | 12/29/1989 | A | 1 | 7008-332 |

| CLASS | CLASS% | DESCRIPTION | BN ID | BN | CARD |
|---|---|---|---|---|---|
| **1010** | **100** | **SINGLE FAMILY** | | **1** | **1 of 1** |

| PMT NO | PMT DT | TY | DESC | AMOUNT | INSP | BY | 1st | % |
|---|---|---|---|---|---|---|---|---|
| | 02/24/2003 | 50 | Meas & List | | | JB | 100 | 100 |
| P2002277 | 06/17/2002 | 99 | n/a | | | | 100 | 100 |
| 92-334 | | 99 | n/a | 18,000 | | | 100 | 100 |

## LAND

| CD | T | AC/SF/UN | Nbhd | Infl1 | Infl2 | ADJ BASE | SAF | Infl3 | Lpi | VC | CREDIT AMT | ADJ VALUE |
|---|---|---|---|---|---|---|---|---|---|---|---|---|
| 100 | S | 10,871 | SC 1.00 | 70 0.70 | 100 1.00 | 1,231,440 | 2.98 | 100 1.00 | VW5 4.80 | | | 916,410 |

| TOTAL | 10,871 SF | ZONING | R20 | FRNT | 122 |
|---|---|---|---|---|---|
| Nbhd | SOUTH CHATHAM | NOTE | Ocean View Abuts Commercial Infl1=Comm Infl | | |
| Infl1 | 70 | | | | |
| Infl2 | 100 | | | | |

| ASSESSED | CURRENT | PREVIOUS |
|---|---|---|
| LAND | 916,400 | 763,600 |
| BUILDING | 501,300 | 456,100 |
| DETACHED | 600 | 600 |
| OTHER | 0 | 0 |
| TOTAL | **1,418,300** | **1,220,300** |

## DETACHED

| TY | QUAL | COND | DIM/NOTE | YB | UNITS | ADJ PRICE | RCNLD |
|---|---|---|---|---|---|---|---|
| SHF | A 1.00 | 20 0.80 | 8X6 | | 48 | 16.25 | 600 |

PHOTO 01/18/2022

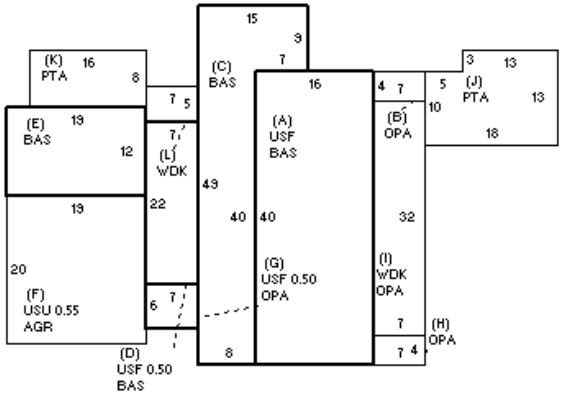


BLDG COMMENTS

## BUILDING

| BUILDING | CD | ADJ | DESC |
|---|---|---|---|
| MODEL | 1 | | RESIDENTIAL |
| STYLE | 5 | 1.00 | COLONIAL [100%] |
| QUALITY | + | 1.20 | PLUS AVE [100%] |
| FRAME | 1 | 1.00 | WOOD FRAME [100%] |

| MEASURE | 1/18/2022 | TCK |
|---|---|---|
| LIST | 1/18/2022 | EST |
| REVIEW | 2/14/2022 | EMZ |

| YEAR BLT | 1938 | SIZE ADJ | 1.000 |
|---|---|---|---|
| NET AREA | 2,215 | DETAIL ADJ | 1.030 |
| $NLA(RCN) | $343 | OVERALL | 1.000 |

| CAPACITY | UNITS | ADJ |
|---|---|---|
| STORIES | 1.75 | 1.00 |
| ROOMS | 7 | 1.00 |
| BEDROOMS | 4 | 1.00 |
| FULL BATHS | 2 | 1.00 |
| 1/2 BATHS | 0 | 1.00 |
| FIXTURES | 6 | $5,933 |
| UNITS | 1 | 1.00 |

| ELEMENT | CD | DESCRIPTION | ADJ |
|---|---|---|---|
| FOUNDATION | 3 | FOUND WALL | 1.00 |
| EXT. COVER | 1 | WOOD SHINGLE | 1.00 |
| ROOF SHAPE | 6 | SALTBOX | 1.00 |
| ROOF COVER | 1 | ASPH/CMP SHIN | 1.00 |
| FLOOR COVER | 23 | SOFTWD/CARPET | 1.00 |
| INT. FINISH | 2 | DRYWALL | 1.00 |
| HEATING/COOL | 9 | WARM/COOL AIR | 1.03 |
| FUEL SOURCE | 2 | GAS | 1.00 |

| S | BAT | T | DESCRIPTION | UNITS | YB | ADJ PRICE | RCN |
|---|---|---|---|---|---|---|---|
| + | BAS | L | BAS AREA | 1,477 | 1938 | 293.02 | 432,785 |
| + | USF | L | UP-STRY FIN | 738 | 1938 | 248.63 | 183,492 |
| + | OPA | N | OPEN PORCH | 322 | | 91.32 | 29,405 |
| F | AGR | N | ATTACHED GARAGE | 380 | | 97.30 | 36,974 |
| F | USU | N | UPPER STORY UNF | 209 | | 149.29 | 31,202 |
| + | PTA | N | PATIO/STOOP | 347 | | 21.48 | 7,453 |
| + | WDK | N | WOOD DECK | 259 | | 70.08 | 18,151 |
| | F21 | O | FPL 2S 1OP | 1 | | 12,451.20 | 12,451 |
| | ODS | O | OUT DOOR SHWR-A | 1 | | 1,772.40 | 1,772 |

| TOTAL RCN | 759,619 |
|---|---|
| CONDITION ELEM | CD |
| EXTERIOR | A |
| INTERIOR | G |
| KITCHEN | A |
| BATHS | A |
| HEAT | A |
| ELECT | A |
| EFF.YR/AGE | 1970 / 52 |
| COND | 34 34 % |
| FUNC | 0 |
| ECON | 0 |
| DEPR | 34 % GD 66 |
| RCNLD | $501,300 |