**Key: 4557**

# Town of CHATHAM - Fiscal Year 2024

9/7/2023 9:38 am SEQ #: 4,988

## LEGAL

| CURRENT OWNER | PARCEL ID | LOCATION |
|---|---|---|
| BORO BARBARA NOONE<br>63 FOREST BEACH RD EXT<br>S CHATHAM, MA 02659 | 3A-14-1 | 63 FOREST BEACH RD EXT |

| TRANSFER HISTORY | DOS | T | SALE PRICE | BK-PG (Cert) |
|---|---|---|---|---|
| BORO BARBARA NOONE | 11/08/2022 | A | 1 | 35470-192 |
| BORO BARBARA NOONE | 11/08/2022 | A | 1 | 35470-189 |
| BORO BARBARA NOONE & JOSE | 04/09/2012 | A | 1 | 26231-285 |

| CLASS | CLASS% | DESCRIPTION | BN ID | BN | CARD |
|---|---|---|---|---|---|
| 1010 | 100 | SINGLE FAMILY | | 1 | 1 of 1 |

| PMT NO | PMT DT | TY | DESC | AMOUNT | INSP | BY | 1st | % |
|---|---|---|---|---|---|---|---|---|
| 22-158 | 02/16/2022 | 99 | n/a | 4,666 | | | 100 | 100 |
| 15-512 | 09/08/2015 | 77 | SOLAR PANELS | | | | 100 | 100 |
| | 04/12/2012 | 50 | Meas & List | | 04/12/2012 | MR | 100 | 100 |
| 11-206 | 05/23/2011 | 1 | New Construc | 450,000 | 06/26/2013 | SF | 100 | 100 |
| 11-202 | 05/17/2011 | 5 | Demolitions | 10,000 | 04/12/2012 | MR | 100 | 100 |

## LAND

| CD | T | AC/SF/UN | Nbhd | Infl1 | Infl2 | ADJ BASE | SAF | Infl3 | Lpi | VC | CREDIT AMT | ADJ VALUE |
|---|---|---|---|---|---|---|---|---|---|---|---|---|
| 100 | S | 24,792 | SC 1.00 | 100 1.00 | 100 1.00 | 1,099,500 | 1.48 | 100 1.00 | VW4 3.00 | | | 928,030 |

| TOTAL | 24,792 SF | ZONING | R20 | FRNT | 0 |
|---|---|---|---|---|---|
| Nbhd | SOUTH CHATHAM | NOTE | Ocean W V Fy2002 subdiv to 2 lots 3A-14 NEW<br>ADDRESS: 63 FOREST BEACH RD. EXT. GREAT<br>VIEWS MARSH/OCEAN | | |
| Infl1 | 100 | | | | |
| Infl2 | 100 | | | | |

| ASSESSED | CURRENT | PREVIOUS |
|---|---|---|
| LAND | 928,000 | 773,300 |
| BUILDING | 1,241,900 | 1,142,800 |
| DETACHED | 0 | 0 |
| OTHER | 0 | 0 |
| TOTAL | **2,169,900** | **1,916,100** |

## DETACHED

| TY | QUAL | COND | DIM/NOTE | YB | UNITS | ADJ PRICE | RCNLD |
|---|---|---|---|---|---|---|---|

PHOTO 03/03/2022

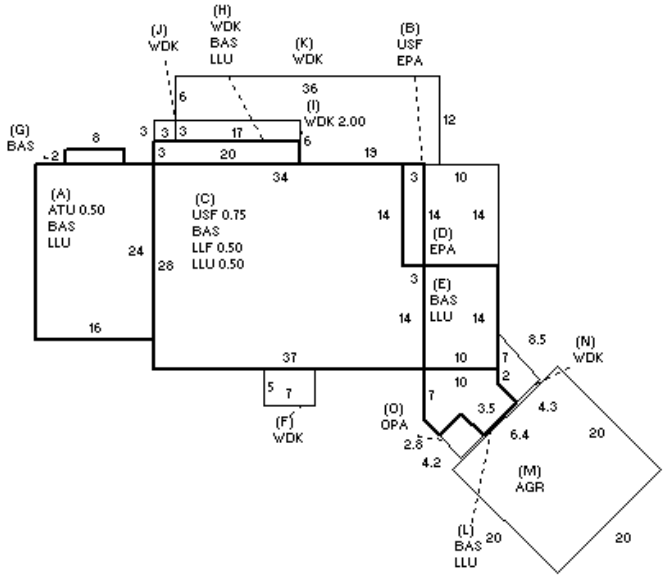


## BUILDING

| BUILDING | CD | ADJ | DESC |
|---|---|---|---|
| MODEL | 1 | | RESIDENTIAL |
| STYLE | 4 | 1.00 | CAPE [100%] |
| QUALITY | G | 1.55 | GOOD [100%] |
| FRAME | 1 | 1.00 | WOOD FRAME [100%] |

| MEASURE | 3/3/2022 | TCK |
|---|---|---|
| LIST | 3/3/2022 | EST |
| REVIEW | 3/16/2022 | EMZ |

BLDG COMMENTS

LLF= FAM RM, BTH
INFO @ DOOR 3/3/22

| YEAR BLT | 2011 | SIZE ADJ | 1.000 |
|---|---|---|---|
| NET AREA | 2,465 | DETAIL ADJ | 1.030 |
| $NLA(RCN) | $566 | OVERALL | 1.000 |

| CAPACITY | UNITS | ADJ |
|---|---|---|
| STORIES | 1.75 | 1.00 |
| ROOMS | 8 | 1.00 |
| BEDROOMS | 3 | 1.00 |
| FULL BATHS | 3 | 1.00 |
| 1/2 BATHS | 1 | 1.00 |
| FIXTURES | 11 | $14,049 |
| UNITS | 1 | 1.00 |

| ELEMENT | CD | DESCRIPTION | ADJ |
|---|---|---|---|
| FOUNDATION | 4 | FLR & WALL | 1.00 |
| EXT. COVER | 1 | WOOD SHINGLE | 1.00 |
| ROOF SHAPE | 1 | GABLE | 1.00 |
| ROOF COVER | 1 | ASPH/CMP SHIN | 1.00 |
| FLOOR COVER | 1 | HARDWOOD | 1.00 |
| INT. FINISH | 2 | DRYWALL | 1.00 |
| HEATING/COOL | 9 | WARM/COOL AIR | 1.03 |
| FUEL SOURCE | 2 | GAS | 1.00 |

| S | BAT | T | DESCRIPTION | UNITS | YB | ADJ PRICE | RCN |
|---|---|---|---|---|---|---|---|
| + | LLU | N | LOWER LEVEL UN | 1,164 | | 200.09 | 232,908 |
| A | ATU | N | UNFIN ATTIC | 192 | | 121.68 | 23,362 |
| + | EPA | N | ENCL PORCH | 182 | | 207.23 | 37,716 |
| + | USF | L | UP-STRY FIN | 788 | 2011 | 301.34 | 237,452 |
| C | LLF | N | LOWER LEVEL FIN | 497 | | 261.35 | 129,889 |
| + | WDK | N | WOOD DECK | 563 | | 90.52 | 50,963 |
| + | BAS | L | BAS AREA | 1,677 | 2011 | 355.13 | 595,547 |
| M | AGR | N | ATTACHED GARAGE | 399 | | 124.74 | 49,771 |
| O | OPA | N | OPEN PORCH | 18 | | 117.97 | 2,124 |
| | GFP | O | GAS LOG/FP/E FP | 2 | | 9,643.35 | 19,287 |
| | ODS | O | OUT DOOR SHWR-A | 1 | | 2,289.40 | 2,289 |

| TOTAL RCN | 1,395,355 |
|---|---|

| CONDITION ELEM | CD |
|---|---|
| EXTERIOR | A |
| INTERIOR | A |
| KITCHEN | A |
| BATHS | A |
| HEAT | A |
| ELECT | A |

| EFF.YR/AGE | 2011 / 11 | | |
|---|---|---|---|
| COND | 11 | 11 % | |
| FUNC | 0 | | |
| ECON | 0 | | |
| DEPR | 11 | % GD | 89 |
| RCNLD | $1,241,900 | | |