Key: 5064

Town of CHATHAM - Fiscal Year 2024

9/7/2023 9:38 am SEQ #: 5,507

LEGAL

CURRENT OWNER	PARCEL ID	LOCATION
MURRAY KENT & SUSAN **PO BOX 323** **S CHATHAM, MA 02659-0323**	**4D-25-A17**	**91 BEACH PLUM RD**

TRANSFER HISTORY	DOS	T	SALE PRICE	BK-PG (Cert)
MURRAY KENT & SUSAN	04/09/2010	QS	415,000	24477-233
91 BEACH PLUM ROAD REALTY	07/07/2008	A	100	23029-29
WHEATON NANCY D	11/08/2000	A	100	13354-41

CLASS	CLASS%	DESCRIPTION	BN ID	BN	CARD
1010	100	SINGLE FAMILY		1	1 of 1

PMT NO	PMT DT	TY	DESC	AMOUNT	INSP	BY	1st	%
19-292	04/29/2019	2	Additions	170,000	01/23/2020	NF	100	100
18-621	08/10/2018	3	Renovations	5,200	02/21/2019	TCK	100	100
18-129	02/12/2018	3	Renovations	5,400	02/21/2019	TCK	100	100
	11/24/2010	51	Meas			CS	100	100
1994279	11/30/1994	99	n/a				100	100

LAND

CD	T	AC/SF/UN	Nbhd	Infl1	Infl2	ADJ BASE	SAF	Infl3	Lpi	VC	CREDIT AMT	ADJ VALUE
100	S	20,700	SC 1.00	DR 1.00	100 1.00	476,450	1.73	100 1.00	R03 1.30			390,560

TOTAL	20,700 SF	ZONING	R20	FRNT	0
Nbhd	SOUTH CHATHAM	NOTE			
Infl1	DIRT ROAD				
Infl2	100				

ASSESSED	CURRENT	PREVIOUS
LAND	390,600	325,500
BUILDING	556,500	512,100
DETACHED	7,600	7,200
OTHER	0	0
TOTAL	**954,700**	**844,800**

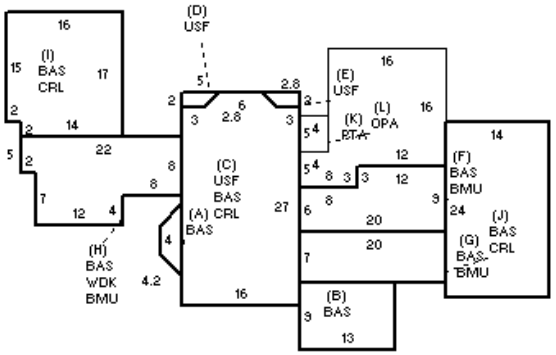

DETACHED

TY	QUAL	COND	DIM/NOTE	YB	UNITS	ADJ PRICE	RCNLD
SHF	A 1.00	10 0.90	10X8		80	15.24	1,100
HTB	A 1.00	10 0.90			1	6,564.90	5,900
SHF	A 1.00	20 0.80	6X8		48	16.25	600

PHOTO 01/23/2020

BLDG COMMENTS

INFO @ DOOR 12/20/21

BUILDING

BUILDING	CD	ADJ	DESC
MODEL	1		RESIDENTIAL
STYLE	5	1.00	COLONIAL [100%]
QUALITY	A	1.00	AVERAGE [100%]
FRAME	1	1.00	WOOD FRAME [100%]

MEASURE	12/20/2021	TCK
LIST	12/20/2021	EST
REVIEW	1/27/2022	EMZ

YEAR BLT	1948	SIZE ADJ	1.000
NET AREA	2,168	DETAIL ADJ	1.000
$NLA(RCN)	$282	OVERALL	1.000

CAPACITY	UNITS	ADJ
STORIES	2	1.00
ROOMS	6	1.00
BEDROOMS	3	1.00
FULL BATHS	3	1.00
1/2 BATHS	0	1.00
FIXTURES	9	$7,200
UNITS	1	1.00

ELEMENT	CD	DESCRIPTION	ADJ
FOUNDATION	3	FOUND WALL	1.00
EXT. COVER	1	WOOD SHINGLE	1.00
ROOF SHAPE	1	GABLE	1.00
ROOF COVER	1	ASPH/CMP SHIN	1.00
FLOOR COVER	1	HARDWOOD	1.00
INT. FINISH	2	DRYWALL	1.00
HEATING/COOL	1	FORCED AIR	1.00
FUEL SOURCE	1	OIL	1.00

S	BAT	T	DESCRIPTION	UNITS	YB	ADJ PRICE	RCN
+	BAS	L	BAS AREA	1,218	1948	241.36	293,971
+	CRL	N	CRAWL SPACE	856		19.73	16,886
+	USF	L	UP-STRY FIN	464	1948	204.80	95,026
+	BMU	N	BSMT UNFINISHED	710		66.33	47,093
H	WDK	N	WOOD DECK	218		58.40	12,731
+	BAS	L	BAS AREA	486	2019	241.36	117,299
K	PTA	N	PATIO/STOOP	288		17.90	5,155
L	OPA	N	OPEN PORCH	20		76.10	1,522
	BMG	O	BSMT GARAGE	1		2,770.00	2,770
	F21	O	FPL 2S 1OP	1		10,376.00	10,376
	ODS	O	OUT DOOR SHWR-A	1		1,477.00	1,477

TOTAL RCN	611,506

CONDITION ELEM	CD
EXTERIOR	A
INTERIOR	V
KITCHEN	V
BATHS	V
HEAT	U
ELECT	U

EFF.YR/AGE	2013 / 9	
COND	9 9 %	
FUNC	0	
ECON	0	
DEPR	9	% GD 91
RCNLD		$556,500