Key: 7231

Town of CHATHAM - Fiscal Year 2024

9/7/2023 9:38 am SEQ #: 7,715

LEGAL

CURRENT OWNER	PARCEL ID	LOCATION
TWOMEY FAMILY TRUST TWOMEY MICHAEL J & CYTHIINA H TRSTES 7 SEMINOLE CIR ANDOVER, MA 01810-5509	8K-51-C123	328 ROUND COVE RD

TRANSFER HISTORY	DOS	T	SALE PRICE	BK-PG (Cert)
TWOMEY FAMILY TRUST	08/29/2019	A	10	(220392)
TWOMEY MICHAEL J & CYNTHI	08/22/2014	QS	495,000	(204242)
SMITH CHRISTOPHER A & LIS	05/18/2005	QS	560,000	(176722)

CLASS	CLASS%	DESCRIPTION	BN ID	BN	CARD
1010	100	SINGLE FAMILY		1	1 of 1

PMT NO	PMT DT	TY	DESC	AMOUNT	INSP	BY	1st	%
17-766	11/07/2017	10	Reroof	12,950	06/22/2018	NF	100	100
16-005	01/06/2016	3	Renovations		06/08/2017	NF	100	100
15-831	12/16/2015	3	Renovations	31,500			100	100
15-613	10/15/2015	12	INSULATION	1,700			100	100
	02/20/2008	50	Meas & List			RRC	100	100

LAND

CD	T	AC/SF/UN	Nbhd	Infl1	Infl2	ADJ BASE	SAF	Infl3	Lpi	VC	CREDIT AMT	ADJ VALUE
100	S	20,436	MC 1.00	100 1.00	100 1.00	366,500	1.74	100 1.00	R03 1.00			299,820

TOTAL	20,436 SF	ZONING	R60	FRNT	0
Nbhd	MID CHATHAM	NOTE	Topo Lt#123/lcp30669a Sheet5		
Infl1	100				
Infl2	100				

ASSESSED	CURRENT	PREVIOUS
LAND	299,800	249,800
BUILDING	526,100	478,900
DETACHED	0	0
OTHER	0	0
TOTAL	**825,900**	**728,700**

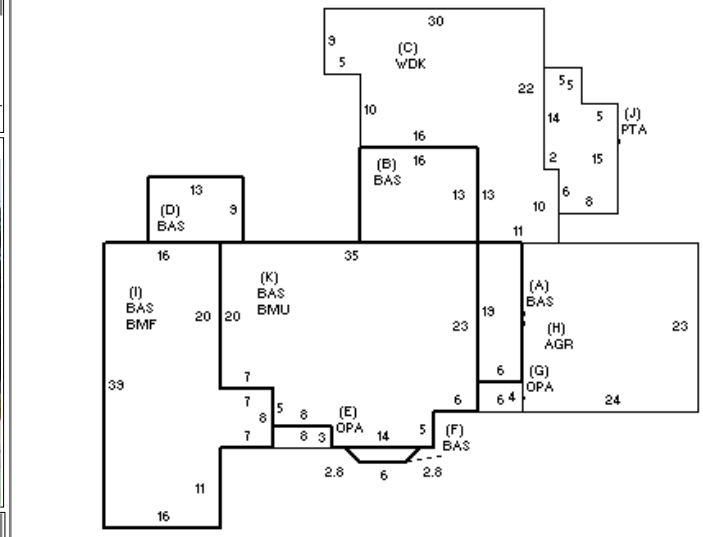

DETACHED

TY	QUAL	COND	DIM/NOTE	YB	UNITS	ADJ PRICE	RCNLD

PHOTO 12/13/2019

BUILDING

BUILDING	CD	ADJ	DESC
MODEL	1		RESIDENTIAL
STYLE	1	0.85	RANCH [100%]
QUALITY	A	1.00	AVERAGE [100%]
FRAME	1	1.00	WOOD FRAME [100%]

MEASURE	12/13/2019	TCK
LIST	12/13/2019	TCK
REVIEW	1/8/2020	MR

BLDG COMMENTS

BMF=FAM RM/BATH

YEAR BLT	1963	SIZE ADJ	1.000
NET AREA	2,005	DETAIL ADJ	0.892
$NLA(RCN)	$341	OVERALL	1.000

CAPACITY	UNITS	ADJ
STORIES	1	1.00
ROOMS	7	1.00
BEDROOMS	3	1.00
FULL BATHS	3	1.00
1/2 BATHS	1	1.00
FIXTURES	12	$8,563
UNITS	1	1.00

ELEMENT	CD	DESCRIPTION	ADJ
FOUNDATION	4	FLR & WALL	1.00
EXT. COVER	1	WOOD SHINGLE	1.00
ROOF SHAPE	1	GABLE	1.00
ROOF COVER	1	ASPH/CMP SHIN	1.00
FLOOR COVER	14	HARDWD/ASPH TL	1.00
INT. FINISH	2	DRYWALL	1.00
HEATING/COOL	11	HT-WT/COOL AIR	1.05
FUEL SOURCE	2	GAS	1.00

S	BAT	T	DESCRIPTION	UNITS	YB	ADJ PRICE	RCN
+	BAS	L	BAS AREA	1,797	1963	218.21	392,130
B	BAS	L	BAS AREA	208	2008	218.21	45,388
C	WDK	N	WOOD DECK	657		58.40	38,369
+	OPA	N	OPEN PORCH	48		76.10	3,653
H	AGR	N	ATTACHED GARAGE	552		77.52	42,789
I	BMF	N	BSMT FINISH-SEP	680		108.60	73,848
J	PTA	N	PATIO/STOOP	163		17.90	2,918
K	BMU	N	BSMT UNFINISHED	870		74.89	65,154
	F12	O	FPL 1S 2OP	1		10,376.00	10,376

TOTAL RCN	683,188

CONDITION ELEM	CD
EXTERIOR	G
INTERIOR	G
KITCHEN	G
BATHS	A
HEAT	A
ELECT	U

EFF.YR/AGE	1994 / 28		
COND	23	23 %	
FUNC	0		
ECON	0		
DEPR	23	% GD	77
RCNLD			$526,100