Key: 8541

Town of CHATHAM - Fiscal Year 2024

9/7/2023 9:38 am SEQ #: 8,859

LEGAL

CURRENT OWNER	PARCEL ID	LOCATION
BROMAN MARY & CLAIRE MCDONALD BROMAN JERRY PAUL 15 SEACREST VILLAGE LN CHATHAM, MA 02633	10E-51R-XW10	15 SEACREST VILLAGE LN

TRANSFER HISTORY	DOS	T	SALE PRICE	BK-PG (Cert)
BROMAN MARY & CLAIRE MCDO	05/18/2012	QS	567,000	26343-79
GRS INVESTMENTS LLC	05/09/2012	B	1	26317-1
GRS INVESTMENTS LLC	06/09/2011	B		25498-11

CLASS	CLASS%	DESCRIPTION	BN ID	BN	CARD
1020	100	CONDOMINIUM		1	1 of 1

PMT NO	PMT DT	TY	DESC	AMOUNT	INSP	BY	1st	%
	05/11/2012	51	Meas		05/11/2012	MR	100	100
11-398	10/11/2011	1	New Construc	200,000	06/17/2013	SF	100	100
11-196	05/13/2011	9	Foundation	7,200	05/11/2012	MR	100	100

LAND

CD	T	AC/SF/UN	Nbhd	Infl1	Infl2	ADJ BASE	SAF	Infl3	Lpi	VC	CREDIT AMT	ADJ VALUE

TOTAL	SF	ZONING	R20	FRNT	0
Nbhd		NOTE	mixed use, also GB3-10,000sf		
Infl1					
Infl2					

ASSESSED	CURRENT	PREVIOUS
LAND	0	0
BUILDING	1,069,500	956,800
DETACHED	0	0
OTHER	0	0
TOTAL	**1,069,500**	**956,800**

DETACHED

TY	QUAL	COND	DIM/NOTE	YB	UNITS	ADJ PRICE	RCNLD

PHOTO 06/17/2013

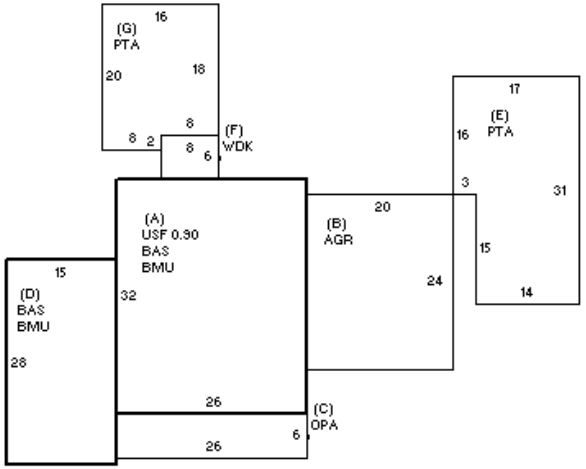

BUILDING

BUILDING	CD	ADJ	DESC
MODEL	10		CONDO
STYLE	2	1.00	FREE STANDING [100%]
QUALITY	G	1.20	GOOD [100%]
FRAME	99	1.00	N/A [100%]

MEASURE	5/11/2012	MR
LIST	5/11/2012	SF
REVIEW	7/16/2013	MR

BLDG COMMENTS

BACKS UP TO MAIN STREET

YEAR BLT	2011	SIZE ADJ	1.000
NET AREA	2,001	DETAIL ADJ	1.854
$NLA(RCN)	$551	OVERALL	1.000

CAPACITY	UNITS	ADJ
ROOMS	8	1.00
BEDROOMS	3	1.00
FULL BATHS	3	1.00
1/2 BATHS	1	1.00
FIXTURES	11	$19,580

ELEMENT	CD	DESCRIPTION	ADJ
COMPLEX	90	MONOMOY V-FS	1.80
UNIT MODEL	99	N/A	1.00
VIEW/LOC	1	NONE	1.00
HVAC	9	WARM/COOL AIR	1.03
FUEL SOURCE	2	GAS	1.00
FLOOR LEVEL	99	N/A	1.00
NEIGHBORHOOD	1	MID-CHATHAM	1.00

S	BAT	T	DESCRIPTION	UNITS	YB	ADJ PRICE	RCN
+	BMU	N	BSMT UNFINISHED	1,252		23.00	28,796
+	BAS	L	BAS AREA	1,252	2011	519.07	649,876
A	USF	L	UP-STRY FIN	749	2011	493.16	369,379
B	AGR	N	ATTACHED GARAGE	480		47.55	22,824
C	OPA	N	OPEN PORCH	156		24.90	3,884
+	PTA	N	PATIO	786		5.70	4,480
F	WDK	N	ATT WOOD DECK	48		19.00	912
	GFP	O	GAS LOG/FP/E FP	1		2,846.00	2,846

TOTAL RCN	1,102,577

CONDITION ELEM	CD
INTERIOR	
KITCHEN	
BATHS	
EXTERIOR	

EFF.YR/AGE	2011 / 11	
COND	3	3 %
FUNC	0	
ECON	0	
DEPR	3	% GD 97
RCNLD		$1,069,500