Property Location 368 EAST ST | Map ID 057/ 032/ 000/ / | Bldg Name | State Use 1010
Vision ID 2424 | Account # 90-32- | Bldg # 1 | Sec # 1 of 1 | Card # 1 of 1 | Print Date 10/27/2023 8:16:17 P

CURRENT OWNER

ROUNDS JOSEPH E

368 EAST ST

DUXBURY MA 02332

TOPO / UTILITIES / STRT / ROAD / LOCATION

		0	Water	0	Arterial	0	Average
		0	No Sewer	0	Paved	0	Average
				0	Heavy		

SUPPLEMENTAL DATA

Alt Prcl ID		Cyclical	4
Scnd Home		Exemption	
Tax Class	T	W	
Tot Fin Area	1720	District	
Total Acres	1.258	Res Exem	
Chapter Lan			
GIS ID	F_868245_2840395	Assoc Pid#	

CURRENT ASSESSMENT

Description	Code	Appraised	Assessed
RESIDNTL	1010	340,000	340,000
RES LAND	1010	361,900	361,900
Total		701,900	701,900

905

DUXBURY, MA

VISION

RECORD OF OWNERSHIP

	BK-VOL/PAGE		SALE DATE	Q/U	V/I	SALE PRICE	VC
ROUNDS JOSEPH E	50844	0338	02-26-2019	U	I	1	1A
ROUNDS JOSEPH E	46883	0154	05-03-2016	Q	I	435,000	00
LANG DAVID	43780	0063	10-31-2013	U	I	323,100	1S
SECRETARY OF HOUSING & URBAN DE	43091	0159	05-21-2013	U	I	1	1B
FLAGSTAR BANK FSB	42614	0208	01-30-2013	U	I	500,547	1L

PREVIOUS ASSESSMENTS (HISTORY)

Year	Code	Assessed	Year	Code	Assessed V	Year	Code	Assessed
2023	1010	261,300	2022	1010	240,000	2021	1010	218,300
	1010	376,400		1010	310,200		1010	258,500
	Total	637,700		Total	550,200		Total	476,800

EXEMPTIONS

Year	Code	Description	Amount
		Total	0.00

OTHER ASSESSMENTS

Code	Description	Number	Amount	Comm Int

This signature acknowledges a visit by a Data Collector or Assessor

ASSESSING NEIGHBORHOOD

Nbhd	Nbhd Name	B	Tracing	Batch
0050				

NOTES

APPRAISED VALUE SUMMARY

Appraised Bldg. Value (Card)	340,000
Appraised Xf (B) Value (Bldg)	0
Appraised Ob (B) Value (Bldg)	0
Appraised Land Value (Bldg)	361,900
Special Land Value	0
Total Appraised Parcel Value	701,900
Valuation Method	C
Total Appraised Parcel Value	701,900

BUILDING PERMIT RECORD

Permit Id	Issue Date	Type	Description	Amount	Insp Date	% Comp	Date Comp	Comments
BPO-20-47	05-19-2020	RM	Remodel	4,756	09-02-2020	100	05-21-2020	MOVE 1 WALL/REPLACE BASE
2016-313	09-27-2016	BP	Bldg Permit	15,640		100		1ST FLR INSTALL 97% GAS FIR
20010152	04-27-2001	MN	Maintenance	2,500		100		STEEL BEAM

VISIT / CHANGE HISTORY

Date	Id	Type	Is	Cd	Purpose/Result
09-02-2020	SJT	5		20	Field Review
11-04-2016	SJD	9		01	Measure - No Entry
04-12-2013	VGS			20	Field Review
04-25-2011	kp		1	00	Measure & Listed

LAND LINE VALUATION SECTION

B	Use Code	Description	Zone	Land Type	Land Units		Unit Price	Size Adj	Site Index	Cond.	Nbhd.	Nbhd. Adj	Notes	Location Adjustment		Adj Unit P	Land Value
1	1010	Single Family	RC	Primary	40,000	SF	8.75	1.00000	5	1.00	0050	1.000			1.0000	8.75	350,000
1	1010	Single Family	RC	Residual	0.340	AC	35,000.00	1.00000	5	1.00	0050	1.000			1.0000	0.80	11,900
				Total Card Land Units	1.26	AC	Parcel Total Land Area			1.26						Total Land Value	361,900

Property Location 368 EAST ST | Map ID 057/ 032/ 000/ / | Bldg Name | State Use 1010
Vision ID 2424 | Account # 90-32- | Bldg # 1 | Sec # 1 of 1 | Card # 1 of 1 | Print Date 10/27/2023 8:16:17 P

CONSTRUCTION DETAIL

Element	Cd	Description
Style	03	Colonial
Model	01	Residential
Grade	05	Ave/Good
Stories	2	
Occupancy	1	
Exterior Wall 1	14	Wood Shingle
Exterior Wall 2		
Roof Structure	03	Gable
Roof Cover	03	Asphalt
Interior Wall 1	05	Drywall
Interior Wall 2		
Interior Floor 1	12	Hardwood
Interior Floor 2		
Heat Fuel	03	Gas
Heat Type	04	Forced Air-Duc
AC Type	01	None
Bedrooms	3	
Full Baths	2	
Half Baths	1	
Extra Fixtures	1	
Total Rooms	6	
Bath Style	02	Average
Kitchen Style	03	Modern
Extra Kitchens	0	
Fireplaces	1	
Extra Openings	1	
Gas Fireplaces	0	
Sq Ft Fin Bsmt	490	
FBM Quality	03	Average
Foundation	06	Poured Conc
Bsmt Garage	0	
Bsmt Area	768	

CONSTRUCTION DETAIL (CONTINUED)

Element	Cd	Description
Bsmt Area	768	
Bsmt Type	03	
Unfin Area	0.00	Partial

CONDO DATA

Parcel Id		C		Owne	
		B		S	

Adjust Type	Code	Description	Factor%
Condo Flr			
Condo Unit			

COST / MARKET VALUATION

	440,590
Net Other Adj	38,285
Replace Cost	478,875
Year Built	1968
Effective Year Built	1992
Depreciation Code	A
Remodel Rating	
Year Remodeled	
Depreciation %	29
Functional Obsol	
External Obsol	
Trend Factor	1.000
Condition	
Condition %	
Percent Good	71
Cns Sect Rcnld	340,000
Dep % Ovr	
Dep Ovr Comment	
Misc Imp Ovr	
Misc Imp Ovr Comment	
Cost to Cure Ovr	
Cost to Cure Ovr Comment	

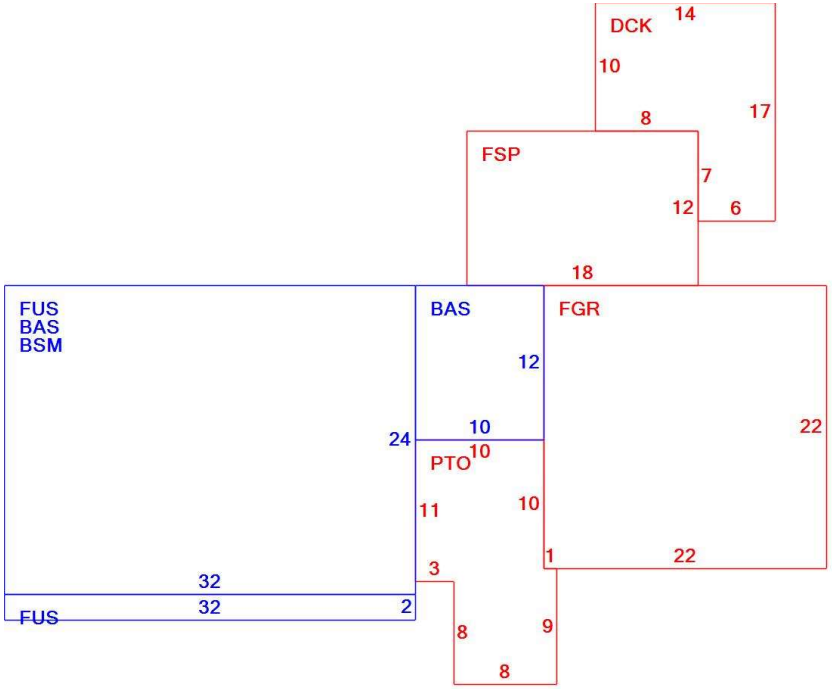

OB - OUTBUILDING & YARD ITEMS(L) / XF - BUILDING EXTRA FEATURES(B)

Code	Description	L/B	Units	Unit Price	Yr Blt	Cond. Cd	% Gd	Grade	Grade Adj.	Appr. Value

BUILDING SUB-AREA SUMMARY SECTION

Code	Description	Living Area	Floor Area	Eff Area	Unit Cost	Undeprec Value
BAS	First Floor	888	888	888	206.08	182,995
BSM	Basement	0	768	154	41.32	31,736
DCK	Deck	0	182	18	20.38	3,709
FGR	Garage	0	484	194	82.60	39,979
FSP	Screened Porch	0	216	43	41.02	8,861
FUS	Finished Upper Story	832	832	832	206.08	171,455
PTO	Patio	0	175	9	10.60	1,855
	Ttl Gross Liv / Lease Area	1,720	3,545	2,138		440,590