Key: 1599

Town of E. BRIDGEWATER - Fiscal Year 2023

12/6/2022 6:38 pm SEQ #: 1,352

LEGAL

CURRENT OWNER	PARCEL ID	LOCATION
MAUGER WILLIAM B JR & DELLA PAOLERA MARY J 16 ROLLING HILLS DR E BRIDGEWATER, MA 02333	39-17-0	16 ROLLING HILLS DR

TRANSFER HISTORY	DOS	T	SALE PRICE	BK-PG (Cert)
MAUGER WILLIAM B JR &	10/25/1990	O	195,000	10005-268
SENESI CATHERINE H	03/17/1988	QS		8340-94
SACHEM DEVELOPMENT CORP	11/20/1986	QS		7283-250

CLASS	CLASS%	DESCRIPTION	BN ID	BN	CARD
1010	100	SINGLE FAMILY		1	1 of 1

PMT NO	PMT DT	TY	DESC	AMOUNT	INSP	BY	1st	%
		6	CYCL GROWTH		05/13/2013	LFF	0	0

LAND

CD	T	AC/SF/UN	Ngh	Infl1	Infl2	ADJ BASE	SAF	Infl3	Lpi	VC	CREDIT AMT	ADJ VALUE
100	S	36,873	4 1.00	100 1.00	100 1.00	225,600	1.15	100 1.00	4 1.20			218,680

TOTAL	36,873 SF	ZONING		FRNT	0
Ngh	RES 4	NOTE	LOT 24		
Infl1	FACTOR 100				
Infl2	PHY 100				

ASSESSED	CURRENT	PREVIOUS
LAND	218,700	182,300
BUILDING	355,100	314,000
DETACHED	11,300	10,700
OTHER	0	0
TOTAL	**585,100**	**507,000**

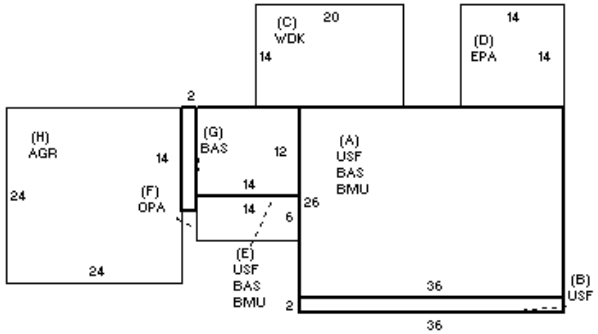

DETACHED

TY	QUAL	COND	DIM/NOTE	YB	UNITS	ADJ PRICE	RCNLD
SHF	A 1.00	40 0.60		1996	200	20.44	2,500
IPV	A 1.00	30 0.70		1996	648	19.48	8,800

PHOTO 10/16/2013

BLDG COMMENTS

BUILDING

BUILDING	CD	ADJ	DESC
MODEL	1		RESIDENTIAL
STYLE	5	0.95	COLONIAL [100%]
QUALITY	A	1.00	AVERAGE [100%]
FRAME	1	1.00	WOOD FRAME [100%]

MEASURE	5/13/2013	LFF
LIST		
REVIEW	3/27/2013	ER

YEAR BLT	1988	SIZE ADJ	1.000
NET AREA	2,308	DETAIL ADJ	0.978
$NLA(RCN)	$200	OVERALL	1.000

CAPACITY	UNITS	ADJ
STORIES	2	1.00
ROOMS	8	1.00
BEDROOMS	4	1.00
BATHROOMS	2	1.00
# 1/2 BATHS	1	1.00
TOT FIXTURES	8	$5,320
# UNITS	1	1.00

ELEMENT	CD	DESCRIPTION	ADJ
FOUNDATION	4	CONT BSMT WALL	1.00
EXT COVER	2	CLAPBOARD	1.00
ROOF SHAPE	1	GABLE	1.00
ROOF COVER	1	ASPH SHINGLES	1.00
FLOOR COVER	99	N/A	1.00
INT FINISH	99	N/A	1.00
HEATING/COOLING	9	WARM/COOL AIR	1.03
FUEL SOURCE	99	N/A	1.00
ARPUD	0		1.00
AFFORDABLE	0		1.00

S	BAT	T	DESCRIPTION	UNITS	YB	ADJ PRICE	RCN
+	BMU	N	BSMT UNFINISHED	1,104		37.82	41,757
+	USF	L	UPPER STORY FIN	1,176	1988	140.88	165,679
C	WDK	N	WOOD DECK	280		31.60	8,848
D	EPA	N	ENCLOSED PORCH	196		74.40	14,582
F	OPA	N	OPEN PORCH	84		42.70	3,587
+	BAS	L	BASE AREA	1,132	1988	155.03	175,499
H	AGR	N	ATT GARAGE	576		67.88	39,101
	F21	O	FPL 2S 1OP	1		6,819.00	6,819

TOTAL RCN	461,192
CONDITION ELEM	CD
EXTERIOR	G
INTERIOR	
KITCHEN	
BATHS	
HEAT	
ELECT	
EFF.YR/AGE	1993 / 28
COND	23 23 %
FUNC	0
ECON	0
DEPR	23 % GD 77
RCNLD	$355,100