Key: 2679

Town of E. BRIDGEWATER - Fiscal Year 2023

12/6/2022 6:38 pm SEQ #: 2,287

LEGAL

CURRENT OWNER	PARCEL ID	LOCATION
CHAVES ANTONIO B & MARIA I **9 EMERALD ST** **E BRIDGEWATER, MA 02333**	**62-48-0**	**7 EMERALD ST**

TRANSFER HISTORY	DOS	T	SALE PRICE	BK-PG (Cert)
CHAVES ANTONIO B & MARIA	05/13/1982	QS		5147-474

CLASS	CLASS%	DESCRIPTION	BN ID	BN	CARD
1040	**100**	**TWO FAMILY**		**1**	**1 of 1**

PMT NO	PMT DT	TY	DESC	AMOUNT	INSP	BY	1st	%
		6	CYCL GROWTH		11/21/2017	SD	0	0
2401	04/09/2015	3	ALTERATIONS	36,000			0	100
2346	02/04/2015	3	ALTERATIONS	51,090			0	0
		6	CYCL GROWTH		07/22/2014	SLB	0	0
		6	CYCL GROWTH		07/10/2014	LF	0	0

LAND

CD	T	AC/SF/UN	Ngh		Infl1		Infl2		ADJ BASE	SAF	Infl3		Lpi		VC	CREDIT AMT	ADJ VALUE
100	S	17,180	3	1.00	100	1.00	100	1.00	188,000	2.23	100	1.00	3	1.00			165,230

TOTAL	17,180 SF	ZONING		FRNT	0
Ngh	RES 3	NOTE	T 13100		
Infl1	FACTOR 100				
Infl2	PHY 100				

ASSESSED	CURRENT	PREVIOUS
LAND	165,200	150,300
BUILDING	298,400	263,900
DETACHED	0	0
OTHER	0	0
TOTAL	**463,600**	**414,200**

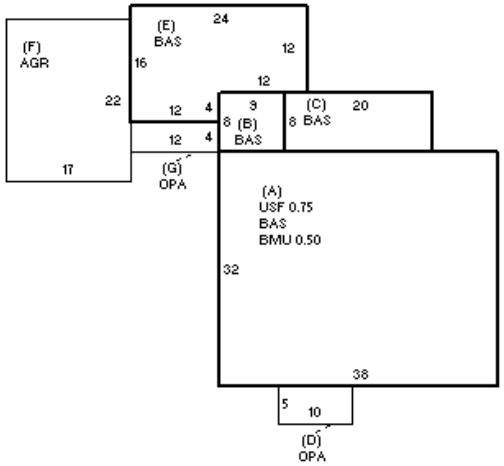

DETACHED

TY	QUAL	COND	DIM/NOTE	YB	UNITS	ADJ PRICE	RCNLD

PHOTO 11/22/2017

BLDG COMMENTS

BUILDING

BUILDING	CD	ADJ	DESC
MODEL	1		RESIDENTIAL
STYLE	4	1.00	CAPE [100%]
QUALITY	A	1.00	AVERAGE [100%]
FRAME	1	1.00	WOOD FRAME [100%]

MEASURE	11/21/2017	SD
LIST		
REVIEW	4/3/2013	ER

YEAR BLT	1840	SIZE ADJ	1.000
NET AREA	2,696	DETAIL ADJ	1.133
$NLA(RCN)	$191	OVERALL	1.000

CAPACITY	UNITS	ADJ
STORIES	1.75	1.00
ROOMS	12	1.00
BEDROOMS	6	1.00
BATHROOMS	2	1.00
# 1/2 BATHS	0	1.00
TOT FIXTURES	6	$4,623
# UNITS	2	1.10

ELEMENT	CD	DESCRIPTION	ADJ
FOUNDATION	5	BRICK/STONE	1.00
EXT COVER	4	VINYL	1.00
ROOF SHAPE	1	GABLE	1.00
ROOF COVER	1	ASPH SHINGLES	1.00
FLOOR COVER	99	N/A	1.00
INT FINISH	99	N/A	1.00
HEATING/COOLING	9	WARM/COOL AIR	1.03
FUEL SOURCE	2	GAS	1.00
ARPUD	0		1.00
AFFORDABLE	0		1.00

S	BAT	T	DESCRIPTION	UNITS	YB	ADJ PRICE	RCN
A	BMU	N	BSMT UNFINISHED	608		46.01	27,975
A	USF	L	UPPER STORY FIN	912	1840	156.22	142,470
+	BAS	L	BASE AREA	1,784	1840	171.91	306,684
+	OPA	N	OPEN PORCH	98		42.70	4,185
F	AGR	N	ATT GARAGE	374		76.10	28,460

TOTAL RCN	514,397
CONDITION ELEM	CD
EXTERIOR	
INTERIOR	
KITCHEN	
BATHS	
HEAT	
ELECT	

EFF.YR/AGE	1964 / 57		
COND	42	42 %	
FUNC	0		
ECON	0		
DEPR	42	% GD	58
RCNLD			$298,400