Key: 2961

Town of E. BRIDGEWATER - Fiscal Year 2023

12/6/2022 6:38 pm SEQ #: 2,536

LEGAL

CURRENT OWNER	PARCEL ID	LOCATION
CAVANAGH FAMILY IRREV TRUST **100 CEDAR ST** **E BRIDGEWATER, MA 02333**	**66-25-0**	**100 CEDAR ST**

TRANSFER HISTORY	DOS	T	SALE PRICE	BK-PG (Cert)
CAVANAGH FAMILY IRREV TRU	11/25/2014	A	1	44984-159
CAVANAGH ROBERT A & CAROL	02/09/1984	QS		5570-349

CLASS	CLASS%	DESCRIPTION	BN ID	BN	CARD
1010	**100**	**SINGLE FAMILY**		**1**	**1 of 1**

PMT NO	PMT DT	TY	DESC	AMOUNT	INSP	BY	1st	%
		6	CYCL GROWTH		08/15/2013		0	0

LAND

CD	T	AC/SF/UN	Ngh		Infl1		Infl2		ADJ BASE	SAF	Infl3		Lpi		VC	CREDIT AMT	ADJ VALUE
100	S	43,560	3	1.00	100	1.00	100	1.00	188,000	1.00	100	1.00	3	1.00			188,000
300	A	1.210	3	1.00	100	1.00	100	1.00	5,700	1.00	100	1.00	ELP	1.00			6,900

TOTAL	2.210 Acres	ZONING		FRNT	0
Ngh	RES 3	NOTE	T 13617 C/W 66/27		
Infl1	FACTOR 100				
Infl2	PHY 100				

ASSESSED	CURRENT	PREVIOUS
LAND	194,900	177,300
BUILDING	225,900	211,000
DETACHED	8,800	8,400
OTHER	0	0
TOTAL	**429,600**	**396,700**

DETACHED

TY	QUAL		COND		DIM/NOTE	YB	UNITS	ADJ PRICE	RCNLD
IPV	A	1.00	30	0.70			648	19.48	8,800

PHOTO 03/11/2013

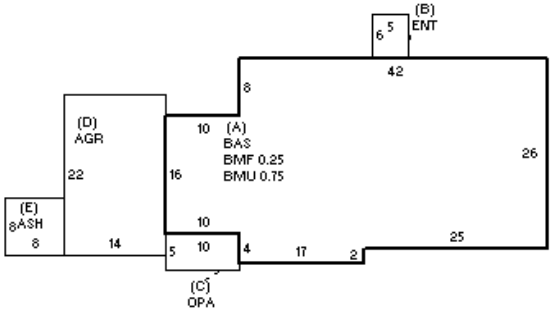

BUILDING

BUILDING	CD	ADJ	DESC
MODEL	1		RESIDENTIAL
STYLE	1	1.00	RANCH [100%]
QUALITY	A	1.00	AVERAGE [100%]
FRAME	1	1.00	WOOD FRAME [100%]

MEASURE	8/15/2013	LF
LIST		
REVIEW	4/5/2013	ER

BLDG COMMENTS

YEAR BLT	1968	SIZE ADJ	1.000
NET AREA	1,286	DETAIL ADJ	1.020
$NLA(RCN)	$270	OVERALL	1.000

CAPACITY	UNITS	ADJ
STORIES	1	1.00
ROOMS	6	1.00
BEDROOMS	3	1.00
BATHROOMS	1	1.00
# 1/2 BATHS	0	1.00
TOT FIXTURES	3	$2,081
# UNITS	1	1.00

ELEMENT	CD	DESCRIPTION	ADJ
FOUNDATION	4	CONT BSMT WALL	1.00
EXT COVER	1	WD SHINGLES	1.00
ROOF SHAPE	1	GABLE	1.00
ROOF COVER	1	ASPH SHINGLES	1.00
FLOOR COVER	99	N/A	1.00
INT FINISH	99	N/A	1.00
HEATING/COOLING	2	HOT WATER	1.02
FUEL SOURCE	99	N/A	1.00
ARPUD	0		1.00
AFFORDABLE	0		1.00

S	BAT	T	DESCRIPTION	UNITS	YB	ADJ PRICE	RCN
A	BMU	N	BSMT UNFINISHED	965		36.40	35,126
A	BMF	N	BSMT FINISH-SEP	322		51.19	16,484
A	BAS	L	BASE AREA	1,286	1968	199.89	257,064
B	ENT	N	ENCLOSED ENTRY	30		81.10	2,433
C	OPA	N	OPEN PORCH	50		42.70	2,135
D	AGR	N	ATT GARAGE	308		81.15	24,995
E	ASH	N	ATT SHED	64		18.75	1,200
	F11	O	FPL 1S 1OP	1		6,017.00	6,017

TOTAL RCN	347,535
CONDITION ELEM	CD
EXTERIOR	
INTERIOR	
KITCHEN	
BATHS	
HEAT	
ELECT	

EFF.YR/AGE	1968 / 53	
COND	35	35 %
FUNC	0	
ECON	0	
DEPR	35	% GD 65
RCNLD		$225,900