Key: 3207

Town of E. BRIDGEWATER - Fiscal Year 2023

12/6/2022 6:38 pm SEQ #: 2,742

LEGAL

CURRENT OWNER	PARCEL ID	LOCATION
ROSS MARY N & DONALD E DUNDON MIKE J 180 UNION ST E. BRIDGEWATER, MA 02333	71-71-0	180 UNION ST

TRANSFER HISTORY	DOS	T	SALE PRICE	BK-PG (Cert)
ROSS MARY N & DONALD E	04/16/2004	QS	325,000	27983-214
CRAWFORD C A & TUCKER WAL	08/14/1987	QS		7931-214
TUCKER WALTER N &	08/13/1987	QS		7931-214

CLASS	CLASS%	DESCRIPTION	BN ID	BN	CARD
1010	100	SINGLE FAMILY		1	1 of 1

PMT NO	PMT DT	TY	DESC	AMOUNT	INSP	BY	1st	%
BP-20-139	09/24/2019	3	ALTERATIONS	6,650			0	0
		6	CYCL GROWTH		07/09/2014	LF	0	0
632	06/28/2004	3	ALTERATIONS	5,000	06/14/2005	CAP	100	100
608	06/16/2004	2	ADDITIONS	25,000	06/14/2005	CAP	100	100
513	05/06/2004	2	ADDITIONS	7,000	06/14/2005	CAP	100	100

LAND

CD	T	AC/SF/UN	Ngh	Infl1	Infl2	ADJ BASE	SAF	Infl3	Lpi	VC	CREDIT AMT	ADJ VALUE
100	S	26,136	3 1.00	100 1.00	100 1.00	188,000	1.53	100 1.00	3 1.00			172,960

TOTAL	26,136 SF	ZONING		FRNT	0
Ngh	RES 3	NOTE	LOT 2		
Infl1	FACTOR 100				
Infl2	PHY 100				

ASSESSED	CURRENT	PREVIOUS
LAND	173,000	157,300
BUILDING	200,000	191,500
DETACHED	0	0
OTHER	0	0
TOTAL	**373,000**	**348,800**

DETACHED

TY	QUAL	COND	DIM/NOTE	YB	UNITS	ADJ PRICE	RCNLD

PHOTO 06/26/2015

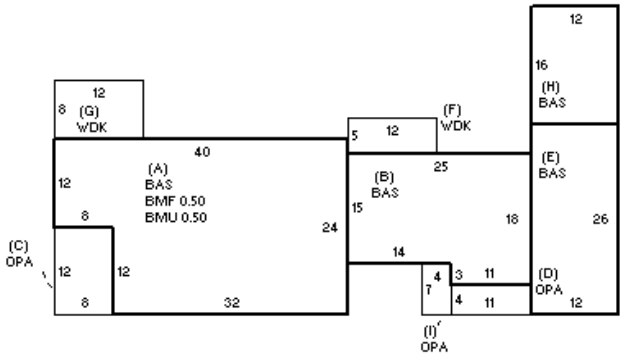

BUILDING

BUILDING	CD	ADJ	DESC
MODEL	1		RESIDENTIAL
STYLE	1	1.00	RANCH [100%]
QUALITY	A	1.00	AVERAGE [100%]
FRAME	1	1.00	WOOD FRAME [100%]

MEASURE	7/9/2014	LF
LIST	6/14/2005	EST
REVIEW	4/8/2013	ER

BLDG COMMENTS

in-law

YEAR BLT	1960	SIZE ADJ	1.000
NET AREA	1,776	DETAIL ADJ	1.089
$NLA(RCN)	$225	OVERALL	1.000

CAPACITY	UNITS	ADJ
STORIES	1	1.00
ROOMS	6	1.00
BEDROOMS	3	1.00
BATHROOMS	2	1.00
# 1/2 BATHS	0	1.00
TOT FIXTURES	6	$4,443
# UNITS	2	1.10

ELEMENT	CD	DESCRIPTION	ADJ
FOUNDATION	4	CONT BSMT WALL	1.00
EXT COVER	1	WD SHINGLES	1.00
ROOF SHAPE	1	GABLE	1.00
ROOF COVER	1	ASPH SHINGLES	1.00
FLOOR COVER	99	N/A	1.00
INT FINISH	99	N/A	1.00
HEATING/COOLING	5	ELECTRIC BB	0.99
FUEL SOURCE	3	ELECTRIC	1.00
ARPUD	0		1.00
AFFORDABLE	0		1.00

S	BAT	T	DESCRIPTION	UNITS	YB	ADJ PRICE	RCN
A	BMU	N	BSMT UNFINISHED	432		40.60	17,539
A	BMF	N	BSMT FINISH-SEP	432		57.09	24,665
+	BAS	L	BASE AREA	1,584	1960	188.00	297,786
+	OPA	N	OPEN PORCH	168		42.70	7,174
+	WDK	N	WOOD DECK	156		31.60	4,930
H	BAS	L	BASE AREA	192	2004	187.99	36,095
	BMG	O	BSMT GARAGE	1		2,063.00	2,063
	KIT	O	XTRA KITCHEN	1		5,387.00	5,387

TOTAL RCN	400,082
CONDITION ELEM	CD
EXTERIOR	
INTERIOR	
KITCHEN	
BATHS	
HEAT	
ELECT	
EFF.YR/AGE	1958 / 63
COND	50 50 %
FUNC	0
ECON	0
DEPR	50 % GD 50
RCNLD	$200,000