Key: 3535

Town of E. BRIDGEWATER - Fiscal Year 2023

12/6/2022 6:38 pm SEQ #: 3,041

LEGAL

CURRENT OWNER	PARCEL ID	LOCATION
SHADRICK DEREK & HEIDI **510 UNION ST** **E BRIDGEWATER, MA 02333**	**80-3-0**	**510 UNION ST**

TRANSFER HISTORY	DOS	T	SALE PRICE	BK-PG (Cert)
SHADRICK DEREK & HEIDI	07/28/2017	QS	395,000	48724-001
HARDIMAN KEVIN J	07/27/2004	QS	350,000	28741-109
MEYER CINDY	03/07/2001	QS	260,000	19466-069

CLASS	CLASS%	DESCRIPTION	BN ID	BN	CARD
1010	**100**	**SINGLE FAMILY**		**1**	**1 of 1**

PMT NO	PMT DT	TY	DESC	AMOUNT	INSP	BY	1st	%
BP-21-408	08/25/2021	3	ALTERATIONS	4,500			0	0
		6	CYCL GROWTH		06/26/2018	SD	0	0
3556	04/10/2018	8	POOL	5,000			0	0
		99	OTHER		03/26/2018	SD	0	0
3394	09/11/2017	3	ALTERATIONS	11,500	09/28/2017	SLB	100	100

LAND

CD	T	AC/SF/UN	Ngh	Infl1	Infl2	ADJ BASE	SAF	Infl3	Lpi	VC	CREDIT AMT	ADJ VALUE
100	S	28,000	3 1.00	100 1.00	100 1.00	188,000	1.44	100 1.00	3 1.00			174,570

TOTAL	28,000 SF	ZONING		FRNT	0
Ngh	RES 3	NOTE	LOT 20		
Infl1	FACTOR 100				
Infl2	PHY 100				

ASSESSED	CURRENT	PREVIOUS
LAND	174,600	158,800
BUILDING	296,900	262,200
DETACHED	0	0
OTHER	0	0
TOTAL	**471,500**	**421,000**

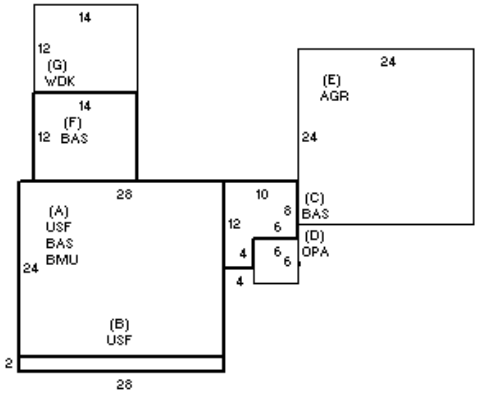

DETACHED

TY	QUAL	COND	DIM/NOTE	YB	UNITS	ADJ PRICE	RCNLD

PHOTO 06/27/2018

BLDG COMMENTS

BUILDING

BUILDING	CD	ADJ	DESC
MODEL	1		RESIDENTIAL
STYLE	5	0.95	COLONIAL [100%]
QUALITY	A	1.00	AVERAGE [100%]
FRAME	1	1.00	WOOD FRAME [100%]

MEASURE	6/26/2018	SD
LIST		
REVIEW	4/10/2013	ER

YEAR BLT	1972	SIZE ADJ	1.000
NET AREA	1,664	DETAIL ADJ	0.978
$NLA(RCN)	$218	OVERALL	1.000

CAPACITY	UNITS	ADJ
STORIES	2	1.00
ROOMS	8	1.00
BEDROOMS	4	1.00
BATHROOMS	1	1.00
# 1/2 BATHS	1	1.00
TOT FIXTURES	5	$3,325
# UNITS	1	1.00

ELEMENT	CD	DESCRIPTION	ADJ
FOUNDATION	4	CONT BSMT WALL	1.00
EXT COVER	4	VINYL	1.00
ROOF SHAPE	1	GABLE	1.00
ROOF COVER	1	ASPH SHINGLES	1.00
FLOOR COVER	99	N/A	1.00
INT FINISH	99	N/A	1.00
HEATING/COOLING	9	WARM/COOL AIR	1.03
FUEL SOURCE	99	N/A	1.00
ARPUD	0		1.00
AFFORDABLE	0		1.00

S	BAT	T	DESCRIPTION	UNITS	YB	ADJ PRICE	RCN
A	BMU	N	BSMT UNFINISHED	672		44.28	29,754
+	USF	L	UPPER STORY FIN	728	1972	157.14	114,398
+	BAS	L	BASE AREA	936	1972	172.92	161,856
D	OPA	N	OPEN PORCH	36		42.69	1,537
E	AGR	N	ATT GARAGE	576		67.88	39,101
G	WDK	N	WOOD DECK	168		31.60	5,309
	F21	O	FPL 2S 1OP	1		6,819.00	6,819

TOTAL RCN	362,099

CONDITION ELEM	CD
EXTERIOR	
INTERIOR	
KITCHEN	G
BATHS	G
HEAT	U
ELECT	U

EFF.YR/AGE	2003 / 18	
COND	18	18 %
FUNC	0	
ECON	0	
DEPR	18	% GD 82
RCNLD		$296,900