Key: 5309

Town of E. BRIDGEWATER - Fiscal Year 2023

12/6/2022 6:38 pm SEQ #: 4,532

LEGAL

CURRENT OWNER	PARCEL ID	LOCATION
KENNEALLY JOHN F TR JOHN F KENNEALLY REVOCABLE TRU 14 EVERGREEN WAY E BRIDGEWATER, MA 02333	72-72-0	14 EVERGREEN WAY

TRANSFER HISTORY	DOS	T	SALE PRICE	BK-PG (Cert)
KENNEALLY JOHN F TR	09/06/2012	A	1	41910-050
KENNEALLY JOHN F	11/01/1976	QS		4213-202

CLASS	CLASS%	DESCRIPTION	BN ID	BN	CARD
1010	100	SINGLE FAMILY		1	1 of 1

PMT NO	PMT DT	TY	DESC	AMOUNT	INSP	BY	1st	%
		6	CYCL GROWTH		03/08/2013	LF	0	0
230	08/18/2005	3	ALTERATIONS	1,500	06/06/2006	SLB	100	100

LAND

CD	T	AC/SF/UN	Ngh		Infl1		Infl2		ADJ BASE	SAF	Infl3		Lpi		VC	CREDIT AMT	ADJ VALUE
100	S	43,560	4	1.00	100	1.00	100	1.00	225,600	1.00	100	1.00	4	1.20			225,600
300	A	0.288	4	1.00	100	1.00	100	1.00	5,700	1.00	100	1.00	ELP	1.00			1,640

TOTAL	1.287 Acres	ZONING		FRNT	0
Ngh	RES 4	NOTE	ESMT/ T 11694		
Infl1	FACTOR 100				
Infl2	PHY 100				

ASSESSED	CURRENT	PREVIOUS
LAND	227,200	189,600
BUILDING	307,400	282,900
DETACHED	0	0
OTHER	0	0
TOTAL	**534,600**	**472,500**

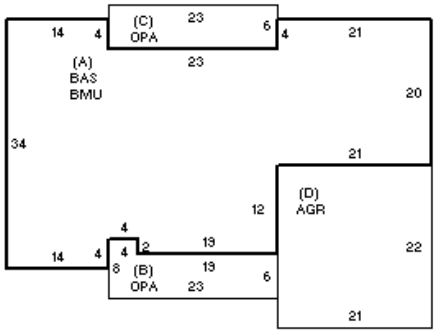

DETACHED

TY	QUAL	COND	DIM/NOTE	YB	UNITS	ADJ PRICE	RCNLD

PHOTO 12/15/2014

BLDG COMMENTS

BUILDING

BUILDING	CD	ADJ	DESC
MODEL	1		RESIDENTIAL
STYLE	1	1.00	RANCH [100%]
QUALITY	A	1.00	AVERAGE [100%]
FRAME	1	1.00	WOOD FRAME [100%]

MEASURE	3/8/2013	LF
LIST		
REVIEW	4/24/2013	ER

YEAR BLT	1996	SIZE ADJ	1.000
NET AREA	1,532	DETAIL ADJ	1.020
$NLA(RCN)	$257	OVERALL	1.000

CAPACITY	UNITS	ADJ
STORIES	1	1.00
ROOMS	5	1.00
BEDROOMS	3	1.00
BATHROOMS	2	1.00
# 1/2 BATHS	0	1.00
TOT FIXTURES	6	$4,162
# UNITS	1	1.00

ELEMENT	CD	DESCRIPTION	ADJ
FOUNDATION	4	CONT BSMT WALL	1.00
EXT COVER	2	CLAPBOARD	1.00
ROOF SHAPE	1	GABLE	1.00
ROOF COVER	1	ASPH SHINGLES	1.00
FLOOR COVER	99	N/A	1.00
INT FINISH	99	N/A	1.00
HEATING/COOLING	2	HOT WATER	1.02
FUEL SOURCE	99	N/A	1.00
ARPUD	0		1.00
AFFORDABLE	0		1.00

S	BAT	T	DESCRIPTION	UNITS	YB	ADJ PRICE	RCN
A	BMU	N	BSMT UNFINISHED	1,532		35.01	53,639
A	BAS	L	BASE AREA	1,532	1996	186.04	285,006
+	OPA	N	OPEN PORCH	284		42.70	12,127
D	AGR	N	ATT GARAGE	462		71.67	33,113
	F11	O	FPL 1S 1OP	1		6,017.00	6,017

TOTAL RCN	394,064
CONDITION ELEM	CD
EXTERIOR	
INTERIOR	
KITCHEN	
BATHS	
HEAT	
ELECT	

EFF.YR/AGE	1996 / 25		
COND	22	22 %	
FUNC	0		
ECON	0		
DEPR	22	% GD	78
RCNLD			$307,400