Key: 7356

Town of E. BRIDGEWATER - Fiscal Year 2023

12/6/2022 6:38 pm SEQ #: 5,419

LEGAL

CURRENT OWNER	PARCEL ID	LOCATION
THE TEAGUE FAMILY TRUST TEAGUE ROBERT TR 49 HARMONY CROSSING E BRIDGEWATER, MA 02333	81-34-42-0	49 HARMONY CROSSING

TRANSFER HISTORY	DOS	T	SALE PRICE	BK-PG (Cert)
THE TEAGUE FAMILY TRUST	06/26/2017	A	1	48585-123
TEAGUE ROBERT L & VALERIE	05/28/2009	QS	259,390	37263-318
BROWN BUILDERS INC	06/04/2007	F	1,356,000	34624-158

CLASS	CLASS%	DESCRIPTION	BN ID	BN	CARD
1010	100	SINGLE FAMILY		1	1 of 1

PMT NO	PMT DT	TY	DESC	AMOUNT	INSP	BY	1st	%
		6	CYCL GROWTH		07/01/2013		0	0
467	10/21/2008	1	NEW CONST	110,000			0	0

LAND

CD	T	AC/SF/UN	Ngh	Infl1	Infl2	ADJ BASE	SAF	Infl3	Lpi	VC	CREDIT AMT	ADJ VALUE
100	S	16,547	1 1.00	100 1.00	100 1.00	122,200	2.31	100 1.00	8 0.65			107,040

TOTAL	16,547 SF	ZONING		FRNT	0
Ngh	RES 1	NOTE			
Infl1	FACTOR 100				
Infl2	PHY 100				

ASSESSED	CURRENT	PREVIOUS
LAND	107,000	97,400
BUILDING	278,600	259,400
DETACHED	0	0
OTHER	0	0
TOTAL	**385,600**	**356,800**

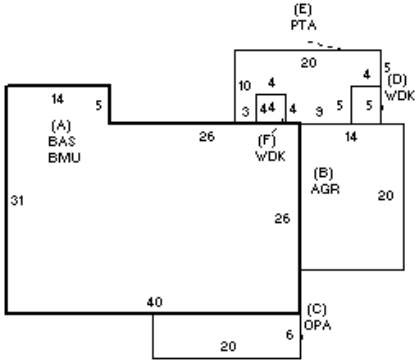

DETACHED

TY	QUAL	COND	DIM/NOTE	YB	UNITS	ADJ PRICE	RCNLD

PHOTO 03/03/2016

BLDG COMMENTS

BUILDING

BUILDING	CD	ADJ	DESC
MODEL	1		RESIDENTIAL
STYLE	1	1.00	RANCH [100%]
QUALITY	A	1.00	AVERAGE [100%]
FRAME	1	1.00	WOOD FRAME [100%]

MEASURE	7/1/2013	LF
LIST		
REVIEW	5/14/2013	ER

YEAR BLT	2009	SIZE ADJ	1.000
NET AREA	1,110	DETAIL ADJ	1.030
$NLA(RCN)	$285	OVERALL	1.000

CAPACITY	UNITS	ADJ
STORIES	1	1.00
ROOMS	4	1.00
BEDROOMS	2	1.00
BATHROOMS	1	1.00
# 1/2 BATHS	1	1.00
TOT FIXTURES	5	$3,502
# UNITS	1	1.00

ELEMENT	CD	DESCRIPTION	ADJ
FOUNDATION	4	CONT BSMT WALL	1.00
EXT COVER	4	VINYL	1.00
ROOF SHAPE	1	GABLE	1.00
ROOF COVER	1	ASPH SHINGLES	1.00
FLOOR COVER	1	HARDWOOD	1.00
INT FINISH	2	DRYWALL	1.00
HEATING/COOLING	9	WARM/COOL AIR	1.03
FUEL SOURCE	99	N/A	1.00
ARPUD	0		1.00
AFFORDABLE	0		1.00

S	BAT	T	DESCRIPTION	UNITS	YB	ADJ PRICE	RCN
A	BMU	N	BSMT UNFINISHED	1,110		37.75	41,906
A	BAS	L	BASE AREA	1,110	2009	215.67	239,394
B	AGR	N	ATT GARAGE	280		83.96	23,509
C	OPA	N	OPEN PORCH	120		42.70	5,124
+	WDK	N	WOOD DECK	36		31.61	1,138
E	PTA	N	PATIO	164		12.50	2,050

TOTAL RCN	316,623
CONDITION ELEM	CD
EXTERIOR	
INTERIOR	
KITCHEN	
BATHS	
HEAT	
ELECT	

EFF.YR/AGE	2009 / 12		
COND	12	12 %	
FUNC	0		
ECON	0		
DEPR	12	% GD	88
RCNLD			$278,600