Property Location 12 TAR KILN PATH | Map ID 10/ 1/ 13/ / | Bldg Name | State Use 1010
Vision ID 359 | Account # | Bldg # 1 | Sec # 1 of 1 | Card # 1 of 1 | Print Date 12/28/2023 4:12:00 P

CURRENT OWNER	TOPO	UTILITIES	STRT / ROAD	LOCATION
FAULKNER ROBERT S--TRS		2 Public Water		
5 HIGHLAND AVE				
MANCHESTER MA 01944				

SUPPLEMENTAL DATA

Alt Prcl ID		Restriction	
PLN#/Rec	CF 204 SCOTT	Hist Distrct	
Lot#	4	Other Note	
Plan Notes	CF 760 TARKILN	UC-Misc 1	
Plan Notes	3B	UC-Misc 2	
Plan Notes			
GIS ID	M_277525_794933	Assoc Pid#	

CURRENT ASSESSMENT

Description	Code	Appraised	Assessed
RESIDENTL	1010	1,252,000	1,252,000
RES LND	1010	380,800	380,800
Total		1,632,800	1,632,800

1302

EDGARTOWN, MA

VISION

RECORD OF OWNERSHIP

	BK-VOL/PAGE		SALE DATE	Q/U	V/I	SALE PRICE	VC
FAULKNER ROBERT S--TRS	1445	0621	08-09-2017	U	I	1	1A
FAULKNER ROBERT S	1348	0172	05-06-2014	Q	I	862,000	00
STUMP PAUL & ANNE	1087	0787	06-26-2006	Q	I	915,000	00
ROSS ADAM J TRS	0876	0106	03-25-2002	Q	I	675,000	00
TARKILN INC	0709	0635	10-02-1997	U	V	480,000	1L

PREVIOUS ASSESSMENTS (HISTORY)

Year	Code	Assessed	Year	Code	Assessed V	Year	Code	Assessed
2023	1010	1,179,200	2022	1010	741,900	2021	1010	687,200
	1010	417,200		1010	399,000		1010	395,800
	Total	1,596,400		Total	1,140,900		Total	1,083,000

EXEMPTIONS

Year	Code	Description	Amount
		Total	0.00

OTHER ASSESSMENTS

Code	Description	Number	Amount	Comm Int

This signature acknowledges a visit by a Data Collector or Assessor

ASSESSING NEIGHBORHOOD

Nbhd	Nbhd Name	B	Tracing	Batch
0045				

NOTES

MBLU CHANGE FOR FY 12 WAS 11-1.13

APPRAISED VALUE SUMMARY

Appraised Bldg. Value (Card)	1,247,500
Appraised Xf (B) Value (Bldg)	3,800
Appraised Ob (B) Value (Bldg)	700
Appraised Land Value (Bldg)	380,800
Special Land Value	0
Total Appraised Parcel Value	1,632,800
Valuation Method	C
Total Appraised Parcel Value	1,632,800

BUILDING PERMIT RECORD

Permit Id	Issue Date	Type	Description	Amount	Insp Date	% Comp	Date Comp	Comments
2015-388	04-17-2015	RA	Res Add/Alter	2,000		0		MIN ALTS INSUL & WEATHE
2001-258	04-09-2001	NC	New Construct			100		CO 3-15-02 SFR

VISIT / CHANGE HISTORY

Date	Id	Type	Is	Cd	Purpost/Result
05-24-2022	DM			11	Field Review
05-27-2017	AU			11	Field Review
03-10-2014	JR	01		01	Cyclical Reinspection
11-15-2011	RK			11	Field Review
12-07-2010	EP			01	Cyclical Reinspection
12-11-2002	WP			11	Field Review
05-03-2002	WP			05	Measur/Review/New Const

LAND LINE VALUATION SECTION

B	Use Code	Description	Zone	Land Type	Land Units		Unit Price	Size Adj	Site Index	Cond.	Nbhd.	Nbhd. Adj	Notes	Location Adjustment		Adj Unit P	Land Value
1	1010	SINGL FAM M-0	R60		37,768	SF	10.08	1.00000	3	1.00	0045	1.000				10.08	380,800
				Total Card Land Units	0.87	AC	Parcel Total Land Area			0.87					Total Land Value		380,800

Property Location 12 TAR KILN PATH | Map ID 10/ 1/ 13/ / | Bldg Name | State Use 1010
Vision ID 359 | Account # | Bldg # 1 | Sec # 1 of 1 | Card # 1 of 1 | Print Date 12/28/2023 4:12:01 P

CONSTRUCTION DETAIL

Element	Cd	Description
Style:	04	Cape Cod
Model	01	Residential
Grade:	05	Ave/Good
Stories:	1.75	1 3/4 Stories
Occupancy		
Exterior Wall 1	14	Wood Shingle
Exterior Wall 2		
Roof Structure:	03	Gable/Hip
Roof Cover	03	Asph/F Gls/Cmp
Interior Wall 1	05	Drywall/Sheet
Interior Wall 2		
Interior Flr 1	12	Hardwood
Interior Flr 2	14	Carpet
Heat Fuel	03	Gas
Heat Type:	04	Forced Air-Duc
AC Type:	03	Central
Total Bedrooms	03	3 Bedrooms
Total Bthrms:	2	
Total Half Baths	1	
Total Xtra Fixtrs		
Total Rooms:	6	
Bath Style:	02	Average
Kitchen Style:	02	Modern

CONSTRUCTION DETAIL (CONTINUED)

Element	Cd	Description

CONDO DATA

Parcel Id		C		Owne	0.0
		B		S	

Adjust Type	Code	Description	Factor%
Condo Flr			
Condo Unit			

COST / MARKET VALUATION

Building Value New	1,313,199
Year Built	2001
Effective Year Built	2017
Depreciation Code	G
Remodel Rating	
Year Remodeled	
Depreciation %	5
Functional Obsol	0
External Obsol	0
Trend Factor	1
Condition	
Condition %	
Percent Good	95
Cns Sect Rcnld	1,247,500
Dep % Ovr	
Dep Ovr Comment	
Misc Imp Ovr	
Misc Imp Ovr Comment	
Cost to Cure Ovr	
Cost to Cure Ovr Comment	

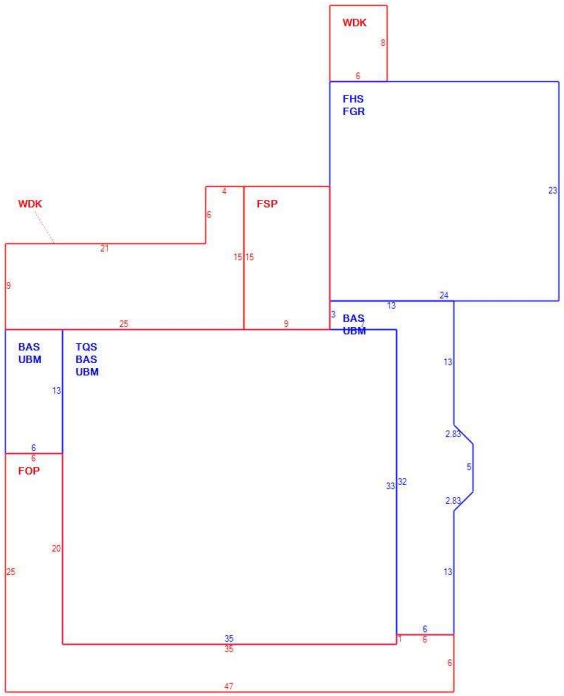

OB - OUTBUILDING & YARD ITEMS(L) / XF - BUILDING EXTRA FEATURES(B)

Code	Description	L/B	Units	Unit Price	Yr Blt	Cond. Cd	% Gd	Grade	Grade Adj.	Appr. Value
FPL3	FPL MSNRY 2	B	1	4000.00	2011		95		0.00	3,800
ODS	OUTDOOR S	L	1	700.00			100		0.00	700

BUILDING SUB-AREA SUMMARY SECTION

Code	Description	Living Area	Floor Area	Eff Area	Unit Cost	Undeprec Value
BAS	First Floor	1,478	1,478	1,478	398.47	588,942
FGR	Garage	0	552	221	159.53	88,062
FHS	Half Story, Finished	276	552	276	199.24	109,978
FOP	Porch, Open, Finished	0	361	72	79.47	28,690
FSP	Porch, Screen, Finished	0	135	34	100.36	13,548
TQS	Three Quarter Story	866	1,155	866	298.77	345,077
UBM	Basement, Unfinished	0	1,478	296	79.80	117,948
WDK	Deck, Wood	0	297	30	40.25	11,954
	Ttl Gross Liv / Lease Area	2,620	6,008	3,273		1,304,199