Property Location 72 CHAPPAQUIDDICK AVE | Map ID 31/ 166/ / / | Bldg Name | State Use 1040
Vision ID 4601 | Account # | Bldg # 1 | Sec # 1 of 1 | Card # 1 of 3 | Print Date 12/28/2023 11:31:46

CURRENT OWNER	TOPO	UTILITIES	STRT / ROAD	LOCATION
SCHUSTER AMY E				
210 OLD FARMS RD				
SIMSBURY CT 06070				

SUPPLEMENTAL DATA

Alt Prcl ID		Restriction	
PLN#/Rec	LC 14472-C	Hist Distrct	
Lot#	12	Other Note	
Plan Notes	SEE NOTES	UC-Misc 1	
Plan Notes		UC-Misc 2	
Plan Notes			
GIS ID	M_285031_792402	Assoc Pid#	

CURRENT ASSESSMENT

Description	Code	Appraised	Assessed
RESIDENTL	1040	2,459,500	2,459,500
RES LND	1040	420,400	420,400
Total		2,879,900	2,879,900

1302

EDGARTOWN, MA

VISION

RECORD OF OWNERSHIP

	BK-VOL/PAGE		SALE DATE	Q/U	V/I	SALE PRICE	VC
SCHUSTER AMY E	0077	0260	02-28-2017	U	I	1,200,000	1
OLSSON STEPHEN--TRS	0071	0227	03-02-2012	U	I	1	1A
CHILDS ROBERT C TRS	0071	0227	12-09-2011	Q	I	790,625	00
CROCKER DONALD M JR	0049	0121	09-08-1995	U	V	1	1A
CROCKER DONALD M JR & SANDRA C	0047	0007	01-11-1994	Q	V	140,000	00

PREVIOUS ASSESSMENTS (HISTORY)

Year	Code	Assessed	Year	Code	Assessed V	Year	Code	Assessed
2023	1040	2,367,300	2022	1040	1,575,300	2021	1040	1,576,000
	1040	400,400		1040	440,282		1040	520,333
	Total	2,767,700		Total	2,015,582		Total	2,096,333

EXEMPTIONS

Year	Code	Description	Amount
		Total	0.00

OTHER ASSESSMENTS

Code	Description	Number	Amount	Comm Int

This signature acknowledges a visit by a Data Collector or Assessor

ASSESSING NEIGHBORHOOD

Nbhd	Nbhd Name	B	Tracing	Batch
CPY4				

NOTES

I/A NATURAL

2011 RENO NOTED (LINK)

FY16: PORTION MERGED WITH 31-153

PER LC 14472-E LT 16

APPRAISED VALUE SUMMARY

Appraised Bldg. Value (Card)	2,317,500
Appraised Xf (B) Value (Bldg)	2,000
Appraised Ob (B) Value (Bldg)	140,000
Appraised Land Value (Bldg)	420,400
Special Land Value	0
Total Appraised Parcel Value	2,879,900
Valuation Method	C
Total Appraised Parcel Value	2,879,900

BUILDING PERMIT RECORD

Permit Id	Issue Date	Type	Description	Amount	Insp Date	% Comp	Date Comp	Comments
2021-718	05-05-2021	RN	Res New Cons	30,000				BLD 572 SQ FT SHED
16-2018	07-10-2018	CO	CO ISSUED			0		GH NEW
2018-46	08-21-2017	RN	Res New Cons	300,000		0		GUESTHOUSE 884 SF
2015-55	08-28-2014	RN	Res New Cons			0		GUESTHOUSE 883 SF
2014-517	06-09-2014	RN	Res New Cons					POOL CABANA 544 SF
2014-442	05-15-2014	RN	Res New Cons					10 X 12 SHED
2012-348	04-30-2012	RN	Res New Cons	50,000				16 X 36 POOL & TENNIS CO

VISIT / CHANGE HISTORY

Date	Id	Type	Is	Cd	Purpost/Result
07-25-2022	EH			01	Cyclical Reinspection
05-25-2022	LS			11	Field Review
04-29-2019	EP			01	Cyclical Reinspection
04-23-2018	EP			00	Measur+Listed
05-22-2017	DM			11	Field Review
06-01-2016	EP			00	Measur+Listed
10-05-2015	EP			01	Cyclical Reinspection

LAND LINE VALUATION SECTION

B	Use Code	Description	Zone	Land Type	Land Units		Unit Price	Size Adj	Site Index	Cond.	Nbhd.	Nbhd. Adj	Notes	Location Adjustment		Adj Unit P	Land Value
1	1040	TWO FAMILY	R12		130,680	SF	2.04	1.00000	2	1.00	CPY4	1.050		V15		3.21	419,900
1	1040	TWO FAMILY	R12		0.010	AC	30,000.00	1.00000	0	1.00	CPY4	1.050		V15		47,250	500
				Total Card Land Units	3.01	AC	Parcel Total Land Area			3.01						Total Land Value	420,400

Property Location 72 CHAPPAQUIDDICK AVE | Map ID 31/ 166/ / / | Bldg Name | State Use 1040
Vision ID 4601 | Account # | Bldg # 1 | Sec # 1 of 1 | Card # 1 of 3 | Print Date 12/28/2023 11:31:47

CONSTRUCTION DETAIL

Element	Cd	Description
Style:	04	Cape Cod
Model	01	Residential
Grade:	06	Good
Stories:	2	2 Stories
Occupancy	1	
Exterior Wall 1	14	Wood Shingle
Exterior Wall 2		
Roof Structure:	03	Gable/Hip
Roof Cover	10	Wood Shingle
Interior Wall 1	05	Drywall/Sheet
Interior Wall 2		
Interior Flr 1	12	Hardwood
Interior Flr 2		
Heat Fuel	02	Oil
Heat Type:	05	Hot Water
AC Type:	01	None
Total Bedrooms	06	6 Bedrooms
Total Bthrms:	4	
Total Half Baths	1	
Total Xtra Fixtrs		
Total Rooms:	10	
Bath Style:	03	Modern
Kitchen Style:	03	Luxurious

CONSTRUCTION DETAIL (CONTINUED)

Element	Cd	Description

CONDO DATA

Parcel Id		C		Owne	0.0
		B		S	

Adjust Type	Code	Description	Factor%
Condo Flr			
Condo Unit			

COST / MARKET VALUATION

Building Value New	1,489,457
Year Built	1995
Effective Year Built	2012
Depreciation Code	G
Remodel Rating	
Year Remodeled	2011
Depreciation %	10
Functional Obsol	0
External Obsol	0
Trend Factor	1
Condition	
Condition %	
Percent Good	90
Cns Sect Rcnld	1,340,500
Dep % Ovr	
Dep Ovr Comment	
Misc Imp Ovr	
Misc Imp Ovr Comment	
Cost to Cure Ovr	
Cost to Cure Ovr Comment	

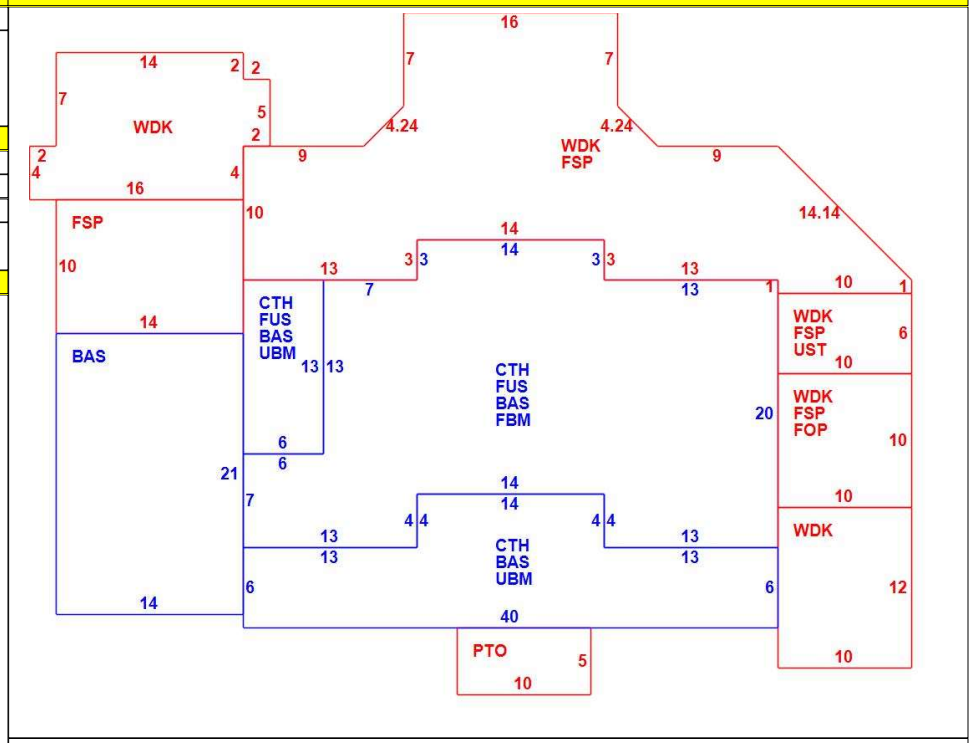

OB - OUTBUILDING & YARD ITEMS(L) / XF - BUILDING EXTRA FEATURES(B)

Code	Description	L/B	Units	Unit Price	Yr Blt	Cond. Cd	% Gd	Grade	Grade Adj.	Appr. Value
TEN	TENNIS COU	L	7,200	5.00	2012		100		0.00	36,000
SPL3	INGR GUNITE	L	594	100.00	2012		100		0.00	59,400
PAT2	PATIO-GOOD	L	416	7.00	2012		100		0.00	2,900
GAZ	GAZEBO	L	119	40.00	2012		100		0.00	4,800
SPA1	SPA INGR W	L	1	4000.00	2012		100		0.00	4,000
ODS	OUTDOOR S	L	1	700.00	2012		100		0.00	700
SHD1	SHED FRAME	L	120	16.00	2014		100		0.00	1,900
SHD8	SHED W/LIGH	L	780	36.00			100		0.00	28,100

BUILDING SUB-AREA SUMMARY SECTION

Code	Description	Living Area	Floor Area	Eff Area	Unit Cost	Undeprec Value
BAS	First Floor	1,376	1,376	1,376	490.28	674,625
CTH	Cath Clng	0	1,082	54	24.47	26,475
FBM	Basement, Finished	0	708	319	220.90	156,399
FOP	Porch, Open, Finished	0	100	20	98.06	9,806
FSP	Porch, Screen, Finished	0	887	222	122.71	108,842
FUS	Upper Story, Finished	786	786	786	490.28	385,360
PTO	Patio	0	50	5	49.03	2,451
UBM	Basement, Unfinished	0	374	75	98.32	36,771
UST	Utility, Storage, Unfinished	0	60	27	220.63	13,238
WDK	Deck, Wood	0	1,039	104	49.08	50,989
	Ttl Gross Liv / Lease Area	2,162	6,462	2,988		1,464,956

Property Location 72 CHAPPAQUIDDICK AVE | Map ID 31/ 166/ / / | Bldg Name | State Use 1040
Vision ID 4601 | Account # | Bldg # 2 | Sec # 1 of 1 | Card # 2 of 3 | Print Date 12/28/2023 11:31:47

CURRENT OWNER

SCHUSTER AMY E

210 OLD FARMS RD

SIMSBURY CT 06070

TOPO	UTILITIES	STRT / ROAD	LOCATION

SUPPLEMENTAL DATA

Alt Prcl ID		Restriction	
PLN#/Rec	LC 14472-C	Hist Distrct	
Lot#	12	Other Note	
Plan Notes	SEE NOTES	UC-Misc 1	
Plan Notes		UC-Misc 2	
Plan Notes			
GIS ID	M_285031_792402	Assoc Pid#	

CURRENT ASSESSMENT

Description	Code	Appraised	Assessed
RESIDENTL	1040	2,459,500	2,459,500
RES LND	1040	420,400	420,400
Total		2,879,900	2,879,900

1302

EDGARTOWN, MA

VISION

RECORD OF OWNERSHIP

	BK-VOL/PAGE		SALE DATE	Q/U	V/I	SALE PRICE	VC
SCHUSTER AMY E	0077	0260	02-28-2017	U	I	1,200,000	1
OLSSON STEPHEN--TRS	0071	0227	03-02-2012	U	I	1	1A
CHILDS ROBERT C TRS	0071	0227	12-09-2011	Q	I	790,625	00
CROCKER DONALD M JR	0049	0121	09-08-1995	U	V	1	1A
CROCKER DONALD M JR & SANDRA C	0047	0007	01-11-1994	Q	V	140,000	00

PREVIOUS ASSESSMENTS (HISTORY)

Year	Code	Assessed	Year	Code	Assessed V	Year	Code	Assessed
2023	1040	2,367,300	2022	1040	1,575,300	2021	1040	1,576,000
	1040	400,400		1040	440,282		1040	520,333
	Total	2,767,700		Total	2,015,582		Total	2,096,333

EXEMPTIONS

Year	Code	Description	Amount
		Total	0.00

OTHER ASSESSMENTS

Code	Description	Number	Amount	Comm Int

This signature acknowledges a visit by a Data Collector or Assessor

ASSESSING NEIGHBORHOOD

Nbhd	Nbhd Name	B	Tracing	Batch
CPY4				

NOTES

FND=START OF GH, BP#2015-55

APPRAISED VALUE SUMMARY

Appraised Bldg. Value (Card)	2,317,500
Appraised Xf (B) Value (Bldg)	2,000
Appraised Ob (B) Value (Bldg)	140,000
Appraised Land Value (Bldg)	420,400
Special Land Value	0
Total Appraised Parcel Value	2,879,900
Valuation Method	C
Total Appraised Parcel Value	2,879,900

BUILDING PERMIT RECORD

Permit Id	Issue Date	Type	Description	Amount	Insp Date	% Comp	Date Comp	Comments

VISIT / CHANGE HISTORY

Date	Id	Type	Is	Cd	Purpost/Result

LAND LINE VALUATION SECTION

B	Use Code	Description	Zone	Land Type	Land Units		Unit Price	Size Adj	Site Index	Cond.	Nbhd.	Nbhd. Adj	Notes	Location Adjustment		Adj Unit P	Land Value
2	1040	TWO FAMILY				SF	0.00	1.00000	0	1.00		1.000				0	0
				Total Card Land Units	0.00	AC	Parcel Total Land Area			3.01					Total Land Value		0

Property Location	72 CHAPPAQUIDDICK AVE	Map ID	31/ 166/ / /	Bldg Name	State Use 1040
Vision ID 4601	Account #	Bldg # 2		Sec # 1 of 1 Card # 2 of 3	Print Date 12/28/2023 11:31:47

CONSTRUCTION DETAIL

Element	Cd	Description
Style:	10	Standard Basic
Model	01	Residential
Grade:	03	Average
Stories:	1	
Occupancy	1	
Exterior Wall 1	14	Wood Shingle
Exterior Wall 2		
Roof Structure:	03	Gable/Hip
Roof Cover	03	Asph/F Gls/Cmp
Interior Wall 1	05	Drywall/Sheet
Interior Wall 2		
Interior Flr 1	03	Concr-Finished
Interior Flr 2		
Heat Fuel	04	Electric
Heat Type:	07	Electr Basebrd
AC Type:		
Total Bedrooms	00	
Total Bthrms:	1	
Total Half Baths	0	
Total Xtra Fixtrs		
Total Rooms:		
Bath Style:	02	Average
Kitchen Style:	02	Modern

CONSTRUCTION DETAIL (CONTINUED)

Element	Cd	Description

CONDO DATA

Parcel Id		C		Owne	0.0
		B		S	

Adjust Type	Code	Description	Factor%
Condo Flr			
Condo Unit			

COST / MARKET VALUATION

Building Value New	66,569
Year Built	2015
Effective Year Built	2019
Depreciation Code	A
Remodel Rating	
Year Remodeled	
Depreciation %	3
Functional Obsol	
External Obsol	
Trend Factor	1
Condition	
Condition %	
Percent Good	97
Cns Sect Rcnld	64,600
Dep % Ovr	
Dep Ovr Comment	
Misc Imp Ovr	
Misc Imp Ovr Comment	
Cost to Cure Ovr	
Cost to Cure Ovr Comment	

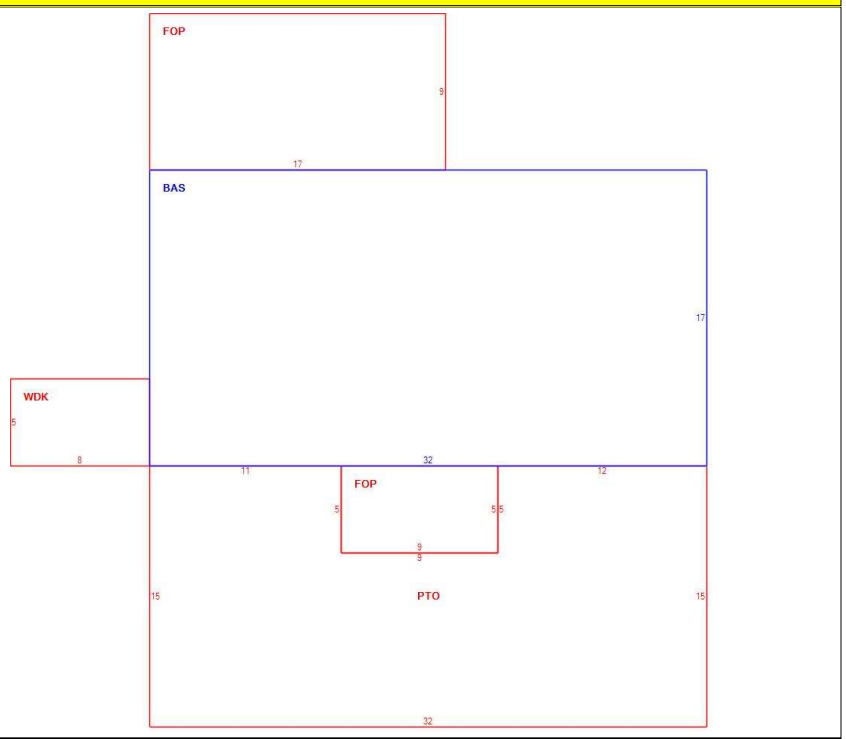

OB - OUTBUILDING & YARD ITEMS(L) / XF - BUILDING EXTRA FEATURES(B)

Code	Description	L/B	Units	Unit Price	Yr Blt	Cond. Cd	% Gd	Grade	Grade Adj.	Appr. Value
SHD1	SHED FRAME	L	48	16.00	2015		100		0.00	800
ODS	OUTDOOR S	L	1	700.00	2015		100		0.00	700

BUILDING SUB-AREA SUMMARY SECTION

Code	Description	Living Area	Floor Area	Eff Area	Unit Cost	Undeprec Value
BAS	First Floor	544	544	544	105.33	57,300
FOP	Porch, Open, Finished	0	198	40	21.28	4,213
PTO	Patio	0	435	44	10.65	4,635
WDK	Deck, Wood	0	40	4	10.53	421
	Ttl Gross Liv / Lease Area	544	1,217	632		66,569

Property Location 72 CHAPPAQUIDDICK AVE | Map ID 31/ 166/ / / | Bldg Name | State Use 1040
Vision ID 4601 | Account # | Bldg # 3 | Sec # 1 of 1 | Card # 3 of 3 | Print Date 12/28/2023 11:31:48

CURRENT OWNER	TOPO	UTILITIES	STRT / ROAD	LOCATION
SCHUSTER AMY E				
210 OLD FARMS RD				
SIMSBURY CT 06070				

SUPPLEMENTAL DATA

Alt Prcl ID		Restriction	
PLN#/Rec	LC 14472-C	Hist Distrct	
Lot#	12	Other Note	
Plan Notes	SEE NOTES	UC-Misc 1	
Plan Notes		UC-Misc 2	
Plan Notes			
GIS ID	M_285031_792402	Assoc Pid#	

CURRENT ASSESSMENT

Description	Code	Appraised	Assessed
RESIDENTL	1040	2,459,500	2,459,500
RES LND	1040	420,400	420,400
Total		2,879,900	2,879,900

1302

EDGARTOWN, MA

VISION

RECORD OF OWNERSHIP

	BK-VOL/PAGE		SALE DATE	Q/U	V/I	SALE PRICE	VC
SCHUSTER AMY E	0077	0260	02-28-2017	U	I	1,200,000	1
OLSSON STEPHEN--TRS	0071	0227	03-02-2012	U	I	1	1A
CHILDS ROBERT C TRS	0071	0227	12-09-2011	Q	I	790,625	00
CROCKER DONALD M JR	0049	0121	09-08-1995	U	V	1	1A
CROCKER DONALD M JR & SANDRA C	0047	0007	01-11-1994	Q	V	140,000	00

PREVIOUS ASSESSMENTS (HISTORY)

Year	Code	Assessed	Year	Code	Assessed V	Year	Code	Assessed
2023	1040	2,367,300	2022	1040	1,575,300	2021	1040	1,576,000
	1040	400,400		1040	440,282		1040	520,333
	Total	2,767,700		Total	2,015,582		Total	2,096,333

EXEMPTIONS

Year	Code	Description	Amount
		Total	0.00

OTHER ASSESSMENTS

Code	Description	Number	Amount	Comm Int

This signature acknowledges a visit by a Data Collector or Assessor

ASSESSING NEIGHBORHOOD

Nbhd	Nbhd Name	B	Tracing	Batch
CPY4				

NOTES

FDN ONLY FROM 2014-2017

2ND FL WINTER WV

APPRAISED VALUE SUMMARY

Appraised Bldg. Value (Card)	2,317,500
Appraised Xf (B) Value (Bldg)	2,000
Appraised Ob (B) Value (Bldg)	140,000
Appraised Land Value (Bldg)	420,400
Special Land Value	0
Total Appraised Parcel Value	2,879,900
Valuation Method	C
Total Appraised Parcel Value	2,879,900

BUILDING PERMIT RECORD

Permit Id	Issue Date	Type	Description	Amount	Insp Date	% Comp	Date Comp	Comments

VISIT / CHANGE HISTORY

Date	Id	Type	Is	Cd	Purpost/Result

LAND LINE VALUATION SECTION

B	Use Code	Description	Zone	Land Type	Land Units		Unit Price	Size Adj	Site Index	Cond.	Nbhd.	Nbhd. Adj	Notes	Location Adjustment		Adj Unit P	Land Value
3	1040	TWO FAMILY				SF	0.00	1.00000		1.00		1.000				0	0
				Total Card Land Units	0.00	AC	Parcel Total Land Area			3.01						Total Land Value	0

Property Location	72 CHAPPAQUIDDICK AVE	Map ID	31/ 166/ / /	Bldg Name	State Use 1040
Vision ID 4601	Account #	Bldg # 3	Sec # 1 of 1	Card # 3 of 3	Print Date 12/28/2023 11:31:48

CONSTRUCTION DETAIL

Element	Cd	Description
Style:	06	Custom
Model	01	Residential
Grade:	06	Good
Stories:	2	
Occupancy	1	
Exterior Wall 1	14	Wood Shingle
Exterior Wall 2		
Roof Structure:	03	Gable/Hip
Roof Cover	03	Asph/F Gls/Cmp
Interior Wall 1	05	Drywall/Sheet
Interior Wall 2		
Interior Flr 1	12	Hardwood
Interior Flr 2		
Heat Fuel	04	Electric
Heat Type:	04	Forced Air-Duc
AC Type:	02	Heat Pump
Total Bedrooms	02	2 Bedrooms
Total Bthrms:	2	
Total Half Baths	1	
Total Xtra Fixtrs		
Total Rooms:		
Bath Style:		
Kitchen Style:		

CONSTRUCTION DETAIL (CONTINUED)

Element	Cd	Description

CONDO DATA

Parcel Id		C		Owne	0.0
		B		S	

Adjust Type	Code	Description	Factor%
Condo Flr			
Condo Unit			

COST / MARKET VALUATION

Building Value New	921,579
Year Built	2017
Effective Year Built	2021
Depreciation Code	A
Remodel Rating	
Year Remodeled	
Depreciation %	1
Functional Obsol	
External Obsol	
Trend Factor	1
Condition	
Condition %	
Percent Good	99
Cns Sect Rcnld	912,400
Dep % Ovr	
Dep Ovr Comment	
Misc Imp Ovr	
Misc Imp Ovr Comment	
Cost to Cure Ovr	
Cost to Cure Ovr Comment	

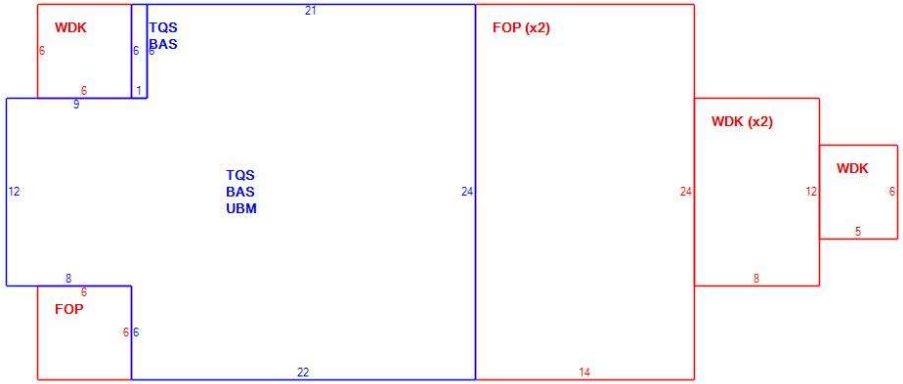

OB - OUTBUILDING & YARD ITEMS(L) / XF - BUILDING EXTRA FEATURES(B)

Code	Description	L/B	Units	Unit Price	Yr Blt	Cond. Cd	% Gd	Grade	Grade Adj.	Appr. Value
ODS	OUTDOOR S	L	1	700.00	2017		100		0.00	700
FPL5	GAS VENTED	B	1	2000.00	2016		99		0.00	2,000

BUILDING SUB-AREA SUMMARY SECTION

Code	Description	Living Area	Floor Area	Eff Area	Unit Cost	Undeprec Value
BAS	First Floor	624	624	624	658.29	410,775
FOP	Porch, Open, Finished	0	708	142	132.03	93,478
TQS	Three Quarter Story	468	624	468	493.72	308,082
UBM	Basement, Unfinished	0	618	124	132.08	81,628
WDK	Deck, Wood	0	258	26	66.34	17,116
	Ttl Gross Liv / Lease Area	1,092	2,832	1,384		911,079