Key: 10943

Town of SCITUATE - Fiscal Year 2024

10/18/2023 5:31 pm SEQ #: 8,458

LEGAL

CURRENT OWNER	PARCEL ID	LOCATION
BILYOU JOHN T & JENNIFER L 6 HICKORY LN SCITUATE, MA 02066	34-31-27-Q	6 HICKORY LN

TRANSFER HISTORY	DOS	T	SALE PRICE	BK-PG (Cert)
BILYOU JOHN T & JENNIFER	08/31/2010	QS	717,000	38923-13
VAN FLEET LISA R, TR	01/05/2006	F	-100	32032-44
VAN FLEET BRUCE IV & LISA	12/02/1996	QS	336,000	14821-84

CLASS	CLASS%	DESCRIPTION	BN ID	BN	CARD
1010	100	SINGLE FAMILY		1	1 of 1

PMT NO	PMT DT	TY	DESC	AMOUNT	INSP	BY	1st	%
22-0652	06/21/2022	3	ALTERATIONS	20,000	05/18/2023	NC	100	100
94-644	12/01/1994	1	NEW CONST				100	100
		6	CYCL GROWTH				100	100

LAND

CD	T	AC/SF/UN	Ngh	Infl1	Infl2	ADJ BASE	SAF	Infl3	Lpi	VC	CREDIT AMT	ADJ VALUE
100	S	21,538	OS 1.00	100 1.00	100 1.00	528,000	1.75	100 1.00	R05 1.20			455,950

TOTAL	21,538 SF	ZONING		FRNT	279
Ngh	OCEANSIDE	NOTE			
Infl1	FACTOR 100				
Infl2	PHY 100				

ASSESSED	CURRENT	PREVIOUS
LAND	456,000	414,500
BUILDING	699,600	592,900
DETACHED	0	0
OTHER	0	0
TOTAL	**1,155,600**	**1,007,400**

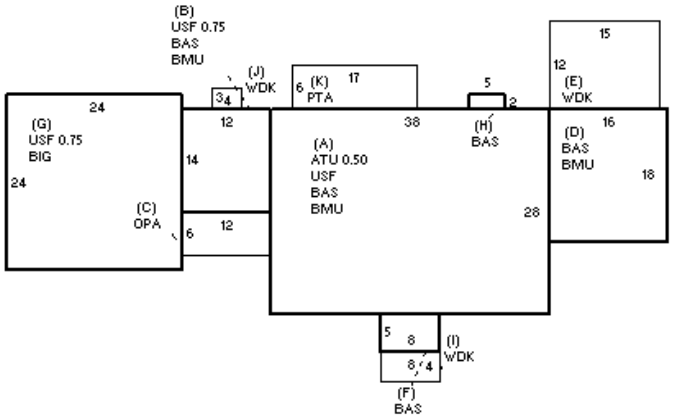

DETACHED

TY	QUAL	COND	DIM/NOTE	YB	UNITS	ADJ PRICE	RCNLD

PHOTO 05/18/2023

BLDG COMMENTS

BUILDING

BUILDING	CD	ADJ	DESC
MODEL	1		RESIDENTIAL
STYLE	5	1.00	COLONIAL [100%]
QUALITY	G	1.20	GOOD [100%]
FRAME	1	1.00	WOOD FRAME [100%]

MEASURE	10/14/2015	SJ
LIST	10/14/2015	EST
REVIEW	6/28/2023	MR

YEAR BLT	1997	SIZE ADJ	1.000
NET AREA	3,192	DETAIL ADJ	1.020
$NLA(RCN)	$271	OVERALL	1.000

CAPACITY	UNITS	ADJ
STORIES	2.5	1.00
ROOMS	9	1.00
BEDROOMS	4	1.00
BATHROOMS	2	1.00
# 1/2 BATHS	1	1.00
TOT FIXTURES	8	$7,834
# UNITS	1	1.00

ELEMENT	CD	DESCRIPTION	ADJ
FOUNDATION	4	CONT BSMT WALL	1.00
EXT COVER	2	CLAPBOARD	1.00
ROOF SHAPE	1	GABLE	1.00
ROOF COVER	1	ASPH SHINGLES	1.00
FLOOR COVER	13	COMB	1.00
INT FINISH	2	DRYWALL	1.00
HEATING/COOLING	2	HOT WATER	1.02
FUEL SOURCE	2	GAS	1.00

S	BAT	T	DESCRIPTION	UNITS	YB	ADJ PRICE	RCN
+	BMU	N	BSMT UNFINISHED	1,520		51.08	77,635
+	USF	L	UPPER STORY FIN	1,190	1997	208.83	248,508
A	ATU	N	ATTIC UNF	532		44.40	23,621
C	OPA	N	OPEN PORCH	72		61.80	4,450
+	WDK	N	WOOD DECK	224		46.08	10,322
+	BAS	L	BASE AREA	1,570	1997	229.64	360,530
G	BIG	N	BUILT-IN GARAGE	576		52.20	30,066
G	USF	L	UPPER STORY FIN	432	2022	208.83	90,215
K	PTA	N	PATIO	102		17.88	1,824
	F11	O	FPL 1S 1OP	1		8,737.20	8,737
	GEN	O	GENERATOR	1		0.00	

TOTAL RCN	863,742

CONDITION ELEM	CD
EXTERIOR	A
INTERIOR	A
KITCHEN	A
BATHS	A
HEAT	A
ELECT	A

EFF.YR/AGE	2003 / 19	
COND	18	18 %
FUNC	0	
ECON	0	
DEPR	19	% GD 81
RCNLD		$699,600