Key: 11178

Town of SCITUATE - Fiscal Year 2024

10/18/2023 5:31 pm SEQ #: 8,638

LEGAL

CURRENT OWNER	PARCEL ID	LOCATION
GANNON JOHN J & CYNTHIA H TR 28 BEACH PLUM LN SCITUATE, MA 02066	44-3-32-B	28 BEACH PLUM LN

TRANSFER HISTORY	DOS	T	SALE PRICE	BK-PG (Cert)
GANNON JOHN J & CYNTHIA H	01/09/2009	F	10	36671-124
GANNON JOHN J & CYNTHIA H	07/17/2008	QS	827,000	36187-62
SHEA ANNE MARIE	08/14/1998	QS	425,000	16505-326

CLASS	CLASS%	DESCRIPTION	BN ID	BN	CARD
1010	100	SINGLE FAMILY		1	1 of 1

PMT NO	PMT DT	TY	DESC	AMOUNT	INSP	BY	1st	%
10-410	09/07/2010	3	ALTERATIONS	10,000	07/14/2011	SJ	100	100
97-485	08/01/1997	1	NEW CONST				100	100

LAND

CD	T	AC/SF/UN	Ngh	Infl1	Infl2	ADJ BASE	SAF	Infl3	Lpi	VC	CREDIT AMT	ADJ VALUE
100	S	25,340	SC 1.00	100 1.00	100 1.00	484,000	1.51	100 1.00	R05 1.10			423,770

TOTAL	25,340 SF	ZONING		FRNT	126
Ngh	SCITUATE	NOTE			
Infl1	FACTOR 100				
Infl2	PHY 100				

ASSESSED	CURRENT	PREVIOUS
LAND	423,800	385,200
BUILDING	709,800	665,800
DETACHED	0	0
OTHER	0	0
TOTAL	**1,133,600**	**1,051,000**

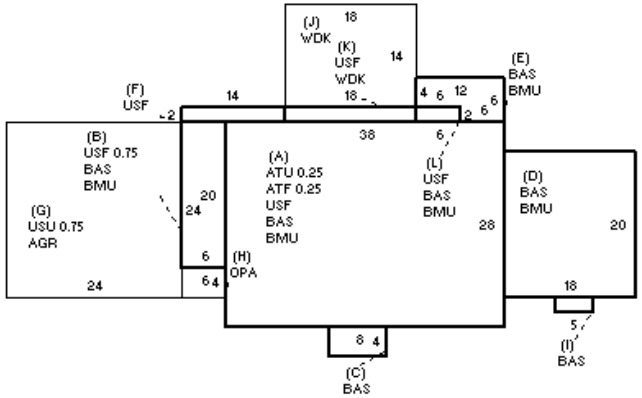

DETACHED

TY	QUAL	COND	DIM/NOTE	YB	UNITS	ADJ PRICE	RCNLD

PHOTO 09/30/2003

BLDG COMMENTS

BUILDING

BUILDING	CD	ADJ	DESC
MODEL	1		RESIDENTIAL
STYLE	5	1.00	COLONIAL [100%]
QUALITY	G	1.20	GOOD [100%]
FRAME	1	1.00	WOOD FRAME [100%]

MEASURE	7/7/2009	PL
LIST	7/7/2009	EST
REVIEW	3/1/2011	ER

YEAR BLT	1998	SIZE ADJ	1.000
NET AREA	3,154	DETAIL ADJ	1.040
$NLA(RCN)	$278	OVERALL	1.000

CAPACITY	UNITS	ADJ
STORIES	2.5	1.00
ROOMS	9	1.00
BEDROOMS	4	1.00
BATHROOMS	2	1.00
# 1/2 BATHS	1	1.00
TOT FIXTURES	9	$8,986
# UNITS	1	1.00

ELEMENT	CD	DESCRIPTION	ADJ
FOUNDATION	4	CONT BSMT WALL	1.00
EXT COVER	2	CLAPBOARD	1.00
ROOF SHAPE	1	GABLE	1.00
ROOF COVER	1	ASPH SHINGLES	1.00
FLOOR COVER	13	COMB	1.00
INT FINISH	2	DRYWALL	1.00
HEATING/COOLING	11	HW/COOL AIR	1.04
FUEL SOURCE	1	OIL	1.00

S	BAT	T	DESCRIPTION	UNITS	YB	ADJ PRICE	RCN
+	BMU	N	BSMT UNFINISHED	1,616		50.42	81,478
A	ATF	L	ATTIC FINISH	266	1998	149.24	39,698
A	ATU	N	ATTIC UNF	266		44.40	11,810
+	BAS	L	BASE AREA	1,658	1998	230.98	382,969
+	USF	L	UPPER STORY FIN	1,230	1998	210.05	258,366
G	AGR	N	ATT GARAGE	576		51.17	29,476
G	USU	N	UPPER STORY UNF	432		92.59	40,000
H	OPA	N	OPEN PORCH	24		61.80	1,483
+	WDK	N	WOOD DECK	288		46.08	13,271
	F11	O	FPL 1S 1OP	1		8,737.20	8,737

TOTAL RCN	876,274
CONDITION ELEM	CD
EXTERIOR	
INTERIOR	
KITCHEN	
BATHS	
HEAT	
ELECT	
EFF.YR/AGE	2003 / 19
COND	18 18 %
FUNC	0
ECON	0
DEPR	19 % GD 81
RCNLD	$709,800