Key: 11826

Town of SCITUATE - Fiscal Year 2024

10/18/2023 5:31 pm SEQ #: 8,875

LEGAL

CURRENT OWNER	PARCEL ID	LOCATION
MANNKE GREGORY J & KAILYN L 96 WATCH HILL DR SCITUATE, MA 02066	52-2-2-G	96 WATCH HILL DR

TRANSFER HISTORY	DOS	T	SALE PRICE	BK-PG (Cert)
MANNKE GREGORY J & KAILYN	07/01/2021	QS	1,170,000	55249-325
D AMBROSIA CHRISTINE	12/15/1995	QS	329,000	14027-163
WEBB GREGORY C TRUSTEE	06/30/1995	XX		13669-245

CLASS	CLASS%	DESCRIPTION	BN ID	BN	CARD
1010	100	SINGLE FAMILY		1	1 of 1

PMT NO	PMT DT	TY	DESC	AMOUNT	INSP	BY	1st	%
		7	OTHERS		08/24/2021	JD	100	100
04-578	09/03/2004	3	ALTERATIONS				100	100
99-605	12/06/1999	3	ALTERATIONS				100	100
95-332	06/01/1995	1	NEW CONST				100	100

LAND

CD	T	AC/SF/UN	Ngh		Infl1		Infl2		ADJ BASE	SAF	Infl3		Lpi		VC	CREDIT AMT	ADJ VALUE
100	S	40,000	WS	1.00	100	1.00	100	1.00	440,000	1.00	100	1.00	R05	1.00			404,040
300	A	0.240	WS	1.00	100	1.00	100	1.00	19,800	1.00	100	1.00	R05	1.00			4,750

TOTAL	1.158 Acres	ZONING		FRNT	37
Ngh	W. SCITUATE	NOTE			
Infl1	FACTOR 100				
Infl2	PHY 100				

ASSESSED	CURRENT	PREVIOUS
LAND	408,800	371,900
BUILDING	678,500	634,500
DETACHED	0	0
OTHER	0	0
TOTAL	**1,087,300**	**1,006,400**

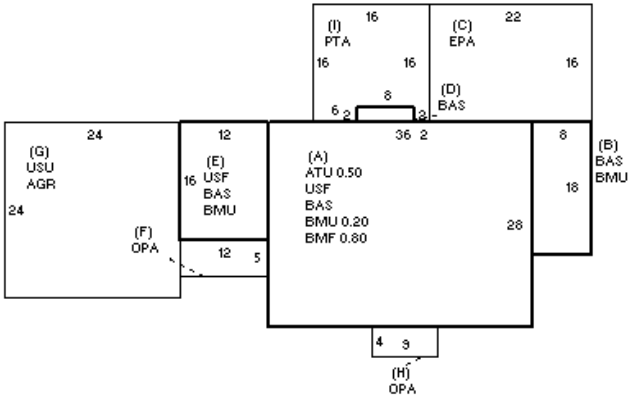

DETACHED

TY	QUAL	COND	DIM/NOTE	YB	UNITS	ADJ PRICE	RCNLD

PHOTO 08/08/2022

BLDG COMMENTS

MLS

BUILDING

BUILDING	CD	ADJ	DESC
MODEL	1		RESIDENTIAL
STYLE	5	1.00	COLONIAL [100%]
QUALITY	G	1.20	GOOD [100%]
FRAME	1	1.00	WOOD FRAME [100%]

MEASURE	8/8/2022	JD
LIST	8/8/2022	EST
REVIEW	8/24/2021	JD

YEAR BLT	1996	SIZE ADJ	1.000
NET AREA	2,560	DETAIL ADJ	1.040
$NLA(RCN)	$327	OVERALL	1.000

CAPACITY	UNITS	ADJ
STORIES	2.5	1.00
ROOMS	9	1.00
BEDROOMS	4	1.00
BATHROOMS	2	1.00
# 1/2 BATHS	1	1.00
TOT FIXTURES	9	$8,986
# UNITS	1	1.00

ELEMENT	CD	DESCRIPTION	ADJ
FOUNDATION	4	CONT BSMT WALL	1.00
EXT COVER	2	CLAPBOARD	1.00
ROOF SHAPE	1	GABLE	1.00
ROOF COVER	1	ASPH SHINGLES	1.00
FLOOR COVER	13	COMB	1.00
INT FINISH	2	DRYWALL	1.00
HEATING/COOLING	11	HW/COOL AIR	1.04
FUEL SOURCE	1	OIL	1.00

S	BAT	T	DESCRIPTION	UNITS	YB	ADJ PRICE	RCN
A	BMF	N	BSMT FINISH-SEP	806		73.62	59,334
+	USF	L	UPPER STORY FIN	1,200	1996	213.40	256,085
A	ATU	N	ATTIC UNF	504		44.40	22,378
+	BMU	N	BSMT UNFINISHED	538		52.44	28,212
C	EPA	N	ENCLOSED PORCH	352		108.24	38,100
+	BAS	L	BASE AREA	1,360	1996	234.67	319,146
+	OPA	N	OPEN PORCH	96		61.80	5,933
G	AGR	N	ATT GARAGE	576		51.17	29,476
G	USU	N	UPPER STORY UNF	576		94.07	54,182
I	PTA	N	PATIO	240		17.88	4,291
	F21	O	FPL 2S 1OP	1		9,886.80	9,887
	ODS	O	OUT DOOR SHOWER	1		1,674.00	1,674

TOTAL RCN	837,683

CONDITION ELEM	CD
EXTERIOR	A
INTERIOR	G
KITCHEN	G
BATHS	A
HEAT	A
ELECT	A

EFF.YR/AGE	2003 / 19		
COND	18	18 %	
FUNC	0		
ECON	0		
DEPR	19	% GD	81
RCNLD			$678,500