Key: 1321

Town of SCITUATE - Fiscal Year 2024

10/18/2023 5:31 pm SEQ #: 1,268

LEGAL

CURRENT OWNER	PARCEL ID	LOCATION
RABSTEJNEK PATSY KIDD TR 181 BORDER STREET COHASSET, MA 02025	3-2-2-0	185 BORDER ST

TRANSFER HISTORY	DOS	T	SALE PRICE	BK-PG (Cert)
RABSTEJNEK PATSY KIDD TR	09/09/2022	F	100	(134465)
RABSTEJNEK GEORGE JR & PA	01/01/1977	QS		4149-84
KOCH EDWARD T & MICKAIL H	01/01/1972	XX		(C00048155)

CLASS	CLASS%	DESCRIPTION	BN ID	BN	CARD
1010	100	SINGLE FAMILY		1	1 of 1

PMT NO	PMT DT	TY	DESC	AMOUNT	INSP	BY	1st	%
	10/05/2022	7	OTHERS		05/22/2023	JD	100	100
08-174	04/01/2008	2	ADDITIONS	134,000	05/27/2008	SJ	100	100
08-174	04/01/2008	2	ADDITIONS	134,000	05/18/2009	SJ	100	100

LAND

CD	T	AC/SF/UN	Ngh		Infl1		Infl2		ADJ BASE	SAF	Infl3		Lpi		VC	CREDIT AMT	ADJ VALUE
100	S	40,000	NS	1.00	100	1.00	100	1.00	660,000	1.00	100	1.00	R07	1.50			606,060
300	A	0.742	NS	1.00	100	1.00	100	1.00	29,700	1.00	100	1.00	R07	1.50			22,040

TOTAL	1.660 Acres	ZONING		FRNT	177
Ngh	NO. SCITUATE	NOTE	. . . .		
Infl1	FACTOR 100				
Infl2	PHY 100				

ASSESSED	CURRENT	PREVIOUS
LAND	628,100	572,100
BUILDING	723,900	494,200
DETACHED	45,300	33,200
OTHER	0	0
TOTAL	**1,397,300**	**1,099,500**

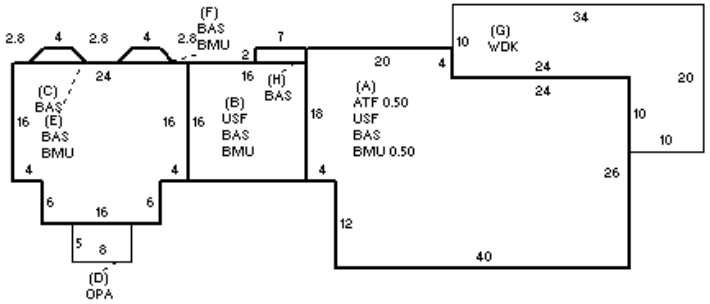

DETACHED

TY	QUAL		COND		DIM/NOTE	YB	UNITS	ADJ PRICE	RCNLD
DGF	-	0.90	50	0.50	26X20		520	40.92	10,600
SHF	A	1.00	50	0.50	10X12		120	13.93	800
IPC	A	1.00	50	0.50	22X54		1,188	30.78	18,300
CAB	A	1.00	50	0.50	26X12		312	29.17	4,600
CTA	-	0.90	50	0.50			1	22,022.37	11,000

PHOTO 05/22/2023

BLDG COMMENTS

BUILDING

BUILDING	CD	ADJ	DESC
MODEL	1		RESIDENTIAL
STYLE	7	1.20	CONVENTIONAL [100%]
QUALITY	G	1.20	GOOD [100%]
FRAME	1	1.00	WOOD FRAME [100%]

MEASURE	5/22/2023	JD
LIST	5/22/2023	EST
REVIEW	3/17/2011	KT

YEAR BLT	1790	SIZE ADJ	1.000
NET AREA	3,970	DETAIL ADJ	1.248
$NLA(RCN)	$285	OVERALL	1.000

CAPACITY	UNITS	ADJ
STORIES	2.5	1.00
ROOMS	11	1.00
BEDROOMS	4	1.00
BATHROOMS	4	1.00
# 1/2 BATHS	0	1.00
TOT FIXTURES	12	$14,377
# UNITS	1	1.00

ELEMENT	CD	DESCRIPTION	ADJ
FOUNDATION	5	BRICK/STONE	1.00
EXT COVER	2	CLAPBOARD	1.00
ROOF SHAPE	1	GABLE	1.00
ROOF COVER	1	ASPH SHINGLES	1.00
FLOOR COVER	24	COMB	1.00
INT FINISH	1	PLASTER	1.00
HEATING/COOLING	11	HW/COOL AIR	1.04
FUEL SOURCE	1	OIL	1.00

S	BAT	T	DESCRIPTION	UNITS	YB	ADJ PRICE	RCN
+	BMU	N	BSMT UNFINISHED	868		59.06	51,263
+	USF	L	UPPER STORY FIN	1,432	1790	249.48	357,257
A	ATF	L	ATTIC FINISH	588	1790	177.25	104,225
+	BAS	L	BASE AREA	1,926	1790	274.34	528,376
D	OPA	N	OPEN PORCH	40		61.80	2,472
+	BAS	L	BASE AREA	24	2008	274.35	6,584
G	WDK	N	WOOD DECK	440		46.08	20,275
	F33	O	FPL 3S 3OP	2		19,773.60	39,547
	GFP	O	GAS FIREPLACE	1		6,667.20	6,667

TOTAL RCN	1,131,043
CONDITION ELEM	CD
EXTERIOR	A
INTERIOR	A
KITCHEN	A
BATHS	A
HEAT	A
ELECT	A
EFF.YR/AGE	1968 / 54
COND	36 36 %
FUNC	0
ECON	0
DEPR	36 % GD 64
RCNLD	$723,900