Key: **190**

Town of SCITUATE - Fiscal Year 2024

10/18/2023 5:31 pm SEQ #: 171

LEGAL

CURRENT OWNER	PARCEL ID	LOCATION
DAVENPORT JAMIE D & MELISSA **16 BOOTH HILL RD** **SCITUATE, MA 02066**	**12-1-11-0**	**16 BOOTH HILL RD**

TRANSFER HISTORY	DOS	T	SALE PRICE	BK-PG (Cert)
DAVENPORT JAMIE D & MELIS	07/07/2009	QS	386,000	37463-136
HOWE IAN R & MAZINE	06/05/1980	QS		4835-432
COLE HOWARD A AND JOAN L	01/01/1955	XX		2356-16

CLASS	CLASS%	DESCRIPTION	BN ID	BN	CARD
1010	**100**	**SINGLE FAMILY**		**1**	**1 of 1**

PMT NO	PMT DT	TY	DESC	AMOUNT	INSP	BY	1st	%
16-128	03/25/2016	3	ALTERATIONS	5,000	06/08/2016	SJ	100	100
13-0596	09/12/2013	2	ADDITIONS	100,000	06/10/2014	MR	100	100
13-596	09/12/2013	2	ADDITIONS	100,000	06/30/2015	SJ	100	100
95-663	11/03/1995	3	ALTERATIONS				100	100

LAND

CD	T	AC/SF/UN	Ngh	Infl1	Infl2	ADJ BASE	SAF	Infl3	Lpi	VC	CREDIT AMT	ADJ VALUE
100	S	34,750	NS 1.00	100 1.00	100 1.00	374,000	1.13	100 1.00	R03 0.85			337,830

TOTAL	34,750 SF	ZONING		FRNT	90
Ngh	NO. SCITUATE	NOTE	C/W 11R. . . .		
Infl1	FACTOR 100				
Infl2	PHY 100				

ASSESSED	CURRENT	PREVIOUS
LAND	337,800	325,200
BUILDING	600,000	533,800
DETACHED	6,900	6,300
OTHER	0	0
TOTAL	**944,700**	**865,300**

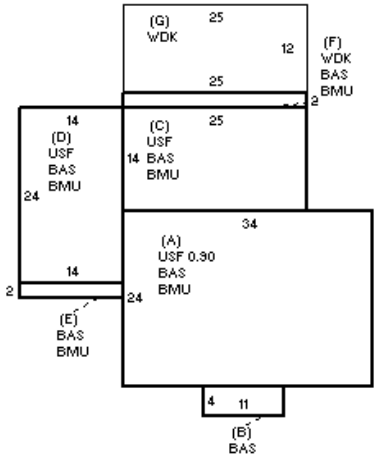

DETACHED

TY	QUAL	COND	DIM/NOTE	YB	UNITS	ADJ PRICE	RCNLD
S/V	A 1.00	SV 1.00	SHED		300	1.10	300
S/V	A 1.00	SV 1.00	VINYL STEEL		6,000	1.10	6,600

PHOTO 06/10/2014

BLDG COMMENTS

DROP STAIR ATTIC

BUILDING

BUILDING	CD	ADJ	DESC
MODEL	1		RESIDENTIAL
STYLE	4	1.10	CAPE [100%]
QUALITY	A	1.00	AVERAGE [100%]
FRAME	1	1.00	WOOD FRAME [100%]

MEASURE	6/10/2014	MR
LIST	6/10/2014	MR
REVIEW	6/26/2014	TD

YEAR BLT	1955	SIZE ADJ	1.000
NET AREA	3,044	DETAIL ADJ	1.122
$NLA(RCN)	$235	OVERALL	1.000

CAPACITY	UNITS	ADJ
STORIES	2	1.00
ROOMS	9	1.00
BEDROOMS	4	1.00
BATHROOMS	3	1.00
# 1/2 BATHS	0	1.00
TOT FIXTURES	9	$8,078
# UNITS	1	1.00

ELEMENT	CD	DESCRIPTION	ADJ
FOUNDATION	4	CONT BSMT WALL	1.00
EXT COVER	2	CLAPBOARD	1.00
ROOF SHAPE	1	GABLE	1.00
ROOF COVER	1	ASPH SHINGLES	1.00
FLOOR COVER	99	N/A	1.00
INT FINISH	99	N/A	1.00
HEATING/COOLING	2	HOT WATER	1.02
FUEL SOURCE	2	GAS	1.00

S	BAT	T	DESCRIPTION	UNITS	YB	ADJ PRICE	RCN
+	BMU	N	BSMT UNFINISHED	1,580		42.23	66,718
A	USF	L	UPPER STORY FIN	734	1955	192.72	141,455
+	BAS	L	BASE AREA	1,224	1955	211.92	259,390
+	BAS	L	BASE AREA	400	2013	211.92	84,768
+	USF	L	UPPER STORY FIN	686	2013	192.72	132,205
+	WDK	N	WOOD DECK	350		38.40	13,440
	F21	O	FPL 2S 1OP	1		8,239.00	8,239

TOTAL RCN	714,293

CONDITION ELEM	CD
EXTERIOR	G
INTERIOR	G
KITCHEN	G
BATHS	A
HEAT	A
ELECT	U

EFF.YR/AGE	2006 / 16	
COND	16	16 %
FUNC	0	
ECON	0	
DEPR	16	% GD 84
RCNLD		$600,000