Key: 2168

Town of SCITUATE - Fiscal Year 2024

10/18/2023 5:31 pm SEQ #: 2,094

LEGAL

CURRENT OWNER	PARCEL ID	LOCATION
HANNA JAMES L & MARY K TR 14 BISHOPS LN SCITUATE, MA 02066	26-9-11-0	14 BISHOPS LN

TRANSFER HISTORY	DOS	T	SALE PRICE	BK-PG (Cert)
HANNA JAMES L & MARY K TR	01/30/2009	F	1	36746-106
HANNA JAMES L	01/01/1974	QS		3871-4
TOWN AND COUNTRY LIVING I	01/01/1973	XX		3766-533

CLASS	CLASS%	DESCRIPTION	BN ID	BN	CARD
1010	100	SINGLE FAMILY		1	1 of 1

PMT NO	PMT DT	TY	DESC	AMOUNT	INSP	BY	1st	%
13-0641	09/24/2013	3	ALTERATIONS	5,994	06/25/2014	MR	100	100

LAND

CD	T	AC/SF/UN	Ngh	Infl1	Infl2	ADJ BASE	SAF	Infl3	Lpi	VC	CREDIT AMT	ADJ VALUE
100	S	26,806	NS 1.00	100 1.00	100 1.00	440,000	1.43	100 1.00	R04 1.00			387,220

TOTAL	26,806 SF	ZONING		FRNT	47
Ngh	NO. SCITUATE	NOTE	IN M20. . . .		
Infl1	FACTOR 100				
Infl2	PHY 100				

ASSESSED	CURRENT	PREVIOUS
LAND	387,200	352,000
BUILDING	378,700	341,500
DETACHED	0	0
OTHER	0	0
TOTAL	**765,900**	**693,500**

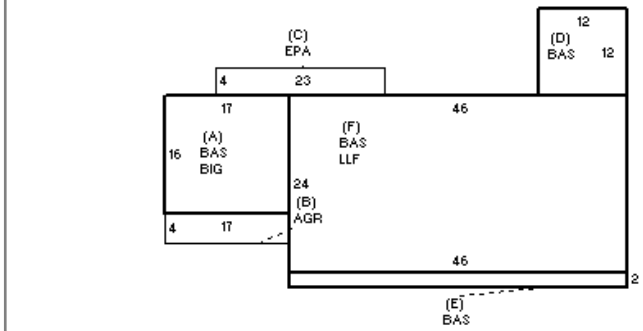

DETACHED

TY	QUAL	COND	DIM/NOTE	YB	UNITS	ADJ PRICE	RCNLD

PHOTO 06/25/2014

BLDG COMMENTS

BUILDING

BUILDING	CD	ADJ	DESC
MODEL	1		RESIDENTIAL
STYLE	2	1.00	RAISED RANCH [100%]
QUALITY	A	1.00	AVERAGE [100%]
FRAME	1	1.00	WOOD FRAME [100%]

MEASURE	6/25/2014	MR
LIST	6/25/2014	EST
REVIEW	7/3/2014	TD

YEAR BLT	1972	SIZE ADJ	1.000
NET AREA	2,716	DETAIL ADJ	1.020
$NLA(RCN)	$186	OVERALL	1.000

CAPACITY	UNITS	ADJ
STORIES	1	1.00
ROOMS	9	1.00
BEDROOMS	4	1.00
BATHROOMS	2	1.00
# 1/2 BATHS	0	1.00
TOT FIXTURES	6	$4,896
# UNITS	1	1.00

ELEMENT	CD	DESCRIPTION	ADJ
FOUNDATION	4	CONT BSMT WALL	1.00
EXT COVER	1	WD SHINGLES	1.00
ROOF SHAPE	1	GABLE	1.00
ROOF COVER	1	ASPH SHINGLES	1.00
FLOOR COVER	99	N/A	1.00
INT FINISH	99	N/A	1.00
HEATING/COOLING	2	HOT WATER	1.02
FUEL SOURCE	99	N/A	1.00

S	BAT	T	DESCRIPTION	UNITS	YB	ADJ PRICE	RCN
A	BIG	N	BUILT-IN GARAGE	272		50.29	13,679
B	AGR	N	ATT GARAGE	68		49.31	3,353
C	EPA	N	ENCLOSED PORCH	92		90.20	8,298
+	BAS	L	BASE AREA	1,612	1972	195.66	315,411
F	LLF	L	LOWER LEVEL FIN	1,104	1972	134.96	148,996
	F12	O	FPL 1S 2OP	1		10,347.00	10,347

TOTAL RCN	504,980

CONDITION ELEM	CD
EXTERIOR	
INTERIOR	
KITCHEN	
BATHS	
HEAT	
ELECT	

EFF.YR/AGE	1990 / 32	
COND	25	25 %
FUNC	0	
ECON	0	
DEPR	25	% GD 75
RCNLD		$378,700