Key: **233**

Town of SCITUATE - Fiscal Year 2024

10/18/2023 5:31 pm SEQ #: 215

LEGAL

CURRENT OWNER	PARCEL ID	LOCATION
GIBBONS EDWARD F III TR & MICHAEL W TR 32 GANNETT PASTURE LN SCITUATE, MA 02066	12-2-16-0	32 GANNETT PASTURE LN

TRANSFER HISTORY	DOS	T	SALE PRICE	BK-PG (Cert)
GIBBONS EDWARD F III TR &	11/10/2014	F	100	(121228)
GIBBONS EDWARD JR & MARIL	01/01/1973	QS		(48568)
CROWLEY ALFRED L AND ANNE	01/01/1962	XX		(C00031435)

CLASS	CLASS%	DESCRIPTION	BN ID	BN	CARD
1010	100	SINGLE FAMILY		1	1 of 1

PMT NO	PMT DT	TY	DESC	AMOUNT	INSP	BY	1st	%

LAND

CD	T	AC/SF/UN	Ngh	Infl1	Infl2	ADJ BASE	SAF	Infl3	Lpi	VC	CREDIT AMT	ADJ VALUE
100	S	23,925	NS 1.00	100 1.00	100 1.00	374,000	1.59	100 1.00	R03 0.85			325,810

TOTAL	23,925 SF	ZONING		FRNT	126
Ngh	NO. SCITUATE	NOTE	. . . .		
Infl1	FACTOR 100				
Infl2	PHY 100				

ASSESSED	CURRENT	PREVIOUS
LAND	325,800	313,600
BUILDING	287,400	269,000
DETACHED	200	200
OTHER	0	0
TOTAL	**613,400**	**582,800**

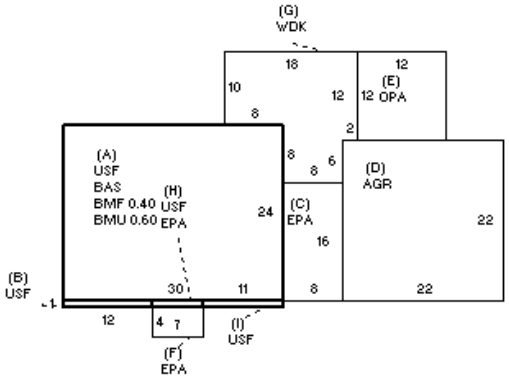

DETACHED

TY	QUAL	COND	DIM/NOTE	YB	UNITS	ADJ PRICE	RCNLD
S/V	A 1.00	SV 1.00	SHED		200	1.10	200

PHOTO 10/03/2003

BLDG COMMENTS

BUILDING

BUILDING	CD	ADJ	DESC
MODEL	1		RESIDENTIAL
STYLE	5	1.00	COLONIAL [100%]
QUALITY	A	1.00	AVERAGE [100%]
FRAME	1	1.00	WOOD FRAME [100%]

MEASURE	7/16/2010	PL
LIST	7/16/2010	EST
REVIEW	3/4/2011	KT

YEAR BLT	1957	SIZE ADJ	1.000
NET AREA	1,470	DETAIL ADJ	1.020
$NLA(RCN)	$283	OVERALL	1.000

CAPACITY	UNITS	ADJ
STORIES	2	1.00
ROOMS	8	1.00
BEDROOMS	4	1.00
BATHROOMS	1	1.00
# 1/2 BATHS	1	1.00
TOT FIXTURES	5	$4,080
# UNITS	1	1.00

ELEMENT	CD	DESCRIPTION	ADJ
FOUNDATION	4	CONT BSMT WALL	1.00
EXT COVER	1	WD SHINGLES	1.00
ROOF SHAPE	1	GABLE	1.00
ROOF COVER	1	ASPH SHINGLES	1.00
FLOOR COVER	99	N/A	1.00
INT FINISH	99	N/A	1.00
HEATING/COOLING	2	HOT WATER	1.02
FUEL SOURCE	99	N/A	1.00

S	BAT	T	DESCRIPTION	UNITS	YB	ADJ PRICE	RCN
A	BMU	N	BSMT UNFINISHED	432		52.37	22,625
A	BMF	N	BSMT FINISH-SEP	288		73.52	21,174
A	BAS	L	BASE AREA	720	1957	219.10	157,753
+	USF	L	UPPER STORY FIN	750	1957	199.25	149,437
+	EPA	N	ENCLOSED PORCH	163		90.20	14,703
D	AGR	N	ATT GARAGE	484		44.45	21,515
E	OPA	N	OPEN PORCH	144		51.50	7,416
G	WDK	N	WOOD DECK	248		38.40	9,523
	F21	O	FPL 2S 1OP	1		8,239.00	8,239

TOTAL RCN	416,465
CONDITION ELEM	CD
EXTERIOR	
INTERIOR	
KITCHEN	
BATHS	
HEAT	
ELECT	
EFF.YR/AGE	1972 / 50
COND	31 31 %
FUNC	0
ECON	0
DEPR	31 % GD 69
RCNLD	$287,400