Key: 2447

Town of SCITUATE - Fiscal Year 2024

10/18/2023 5:31 pm SEQ #: 2,359

LEGAL

CURRENT OWNER	PARCEL ID	LOCATION
RODRIGUES FIDELIO 21 MARION RD EXT SCITUATE, MA 02066	27-5-12-0	23 PLEASANT ST

TRANSFER HISTORY	DOS	T	SALE PRICE	BK-PG (Cert)
RODRIGUES FIDELIO	11/27/2015	F	100	46319-209
RODRIGUES MARIA A	06/20/2011	E	60,000	40036-146
TOWN OF SCITUATE	12/02/2010	E		39349-22

CLASS	CLASS%	DESCRIPTION	BN ID	BN	CARD
1010	100	SINGLE FAMILY		1	1 of 1

PMT NO	PMT DT	TY	DESC	AMOUNT	INSP	BY	1st	%
		7	OTHERS		01/19/2023	JD	100	100
15-839	12/08/2015	3	ALTERATIONS	120,000	06/27/2016	SJ	100	50
15-389	12/08/2015	3	ALTERATIONS	120,000	07/07/2017	SJ	100	100
15-839	12/08/2015	3	ALTERATIONS	120,000	07/07/2017	SJ	100	100
15-718	10/28/2015	3	ALTERATIONS	3,000	06/27/2016	SJ	100	100

LAND

CD	T	AC/SF/UN	Ngh	Infl1	Infl2	ADJ BASE	SAF	Infl3	Lpi	VC	CREDIT AMT	ADJ VALUE
100	S	17,540	NS 1.00	100 1.00	100 1.00	336,600	2.11	90 0.90	R02 0.85			286,160

TOTAL	17,540 SF	ZONING		FRNT	105
Ngh	NO. SCITUATE	NOTE	INFL 3= SHAPE		
Infl1	FACTOR 100				
Infl2	PHY 100				

ASSESSED	CURRENT	PREVIOUS
LAND	286,200	275,500
BUILDING	510,700	361,300
DETACHED	3,900	3,500
OTHER	0	0
TOTAL	**800,800**	**640,300**

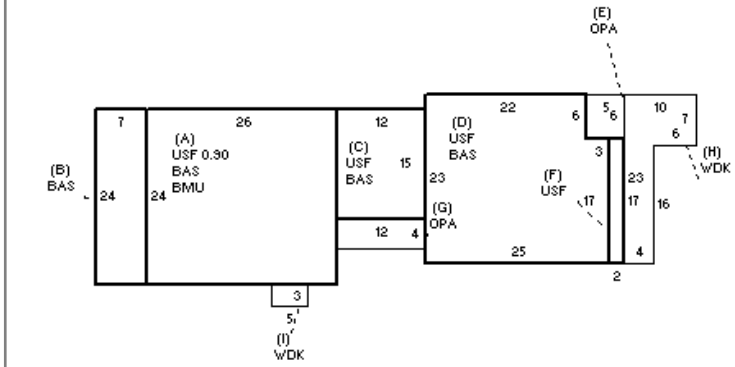

DETACHED

TY	QUAL	COND	DIM/NOTE	YB	UNITS	ADJ PRICE	RCNLD
S/V	A 1.00	SV 1.00	CONCRETE		3,500	1.10	3,900

PHOTO 01/19/2023

BLDG COMMENTS

BUILDING

BUILDING	CD	ADJ	DESC
MODEL	1		RESIDENTIAL
STYLE	7	1.20	CONVENTIONAL [100%]
QUALITY	A	1.00	AVERAGE [100%]
FRAME	1	1.00	WOOD FRAME [100%]

MEASURE	1/19/2023	JD
LIST	1/19/2023	EST
REVIEW		

YEAR BLT	1924	SIZE ADJ	1.000
NET AREA	2,862	DETAIL ADJ	1.248
$NLA(RCN)	$248	OVERALL	1.000

CAPACITY	UNITS	ADJ
STORIES	2	1.00
ROOMS	6	1.00
BEDROOMS	3	1.00
BATHROOMS	2	1.00
# 1/2 BATHS	0	1.00
TOT FIXTURES	6	$5,990
# UNITS	2	1.02

ELEMENT	CD	DESCRIPTION	ADJ
FOUNDATION	4	CONT BSMT WALL	1.00
EXT COVER	4	VINYL	1.00
ROOF SHAPE	1	GABLE	1.00
ROOF COVER	1	ASPH SHINGLES	1.00
FLOOR COVER	12	COMB	1.00
INT FINISH	2	DRYWALL	1.00
HEATING/COOLING	2	HOT WATER	1.02
FUEL SOURCE	2	GAS	1.00

S	BAT	T	DESCRIPTION	UNITS	YB	ADJ PRICE	RCN
A	BMU	N	BSMT UNFINISHED	624		55.28	34,493
+	BAS	L	BASE AREA	1,529	1924	237.56	363,229
+	OPA	N	OPEN PORCH	78		51.50	4,017
+	USF	L	UPPER STORY FIN	1,333	1924	216.04	287,975
+	WDK	N	WOOD DECK	149		38.40	5,722
	FPL	O	FIREPLACE	1		7,813.00	7,813

TOTAL RCN 709,239

CONDITION ELEM	CD
EXTERIOR	G
INTERIOR	G
KITCHEN	G
BATHS	G
HEAT	A
ELECT	A

EFF.YR/AGE 1977 / 45

COND	28	28 %	
FUNC	0		
ECON	0		
DEPR	28	% GD	72

RCNLD $510,700