Key: 2621

Town of SCITUATE - Fiscal Year 2024

10/18/2023 5:31 pm SEQ #: 2,528

LEGAL

CURRENT OWNER	PARCEL ID	LOCATION
BEVERIDGE J NELSON & EVELYN LE S/O CADY JOHN A JR TR 85 INDIAN TRL SCITUATE, MA 02066	7-8-17-0	85 INDIAN TRL

TRANSFER HISTORY	DOS	T	SALE PRICE	BK-PG (Cert)
CADY JOHN A JR TR	05/30/2023	QS	1,351,000	57955-240
BEVERIDGE J NELSON & EVEL	01/25/2016	F	10	46523-37
BEVERIDGE NELSON & EVELYN	08/04/1998	QS	325,000	16473-173

CLASS	CLASS%	DESCRIPTION	BN ID	BN	CARD
1010	100	SINGLE FAMILY		1	1 of 1

PMT NO	PMT DT	TY	DESC	AMOUNT	INSP	BY	1st	%
23-0497	06/09/2023	3	ALTERATIONS	90,000			0	0
		6	CYCL GROWTH		09/21/2005		100	100
98-435	08/25/1998	3	ALTERATIONS				100	100
88-115	03/01/1988	3	ALTERATIONS				100	100
		6	CYCL GROWTH				100	100

LAND

CD	T	AC/SF/UN	Ngh		Infl1		Infl2		ADJ BASE	SAF	Infl3		Lpi		VC	CREDIT AMT	ADJ VALUE
100	S	40,000	NS	1.00	100	1.00	100	1.00	528,000	1.00	100	1.00	R05	1.20			484,850
300	A	0.045	NS	1.00	100	1.00	100	1.00	23,760	1.00	100	1.00	R05	1.20			1,070

TOTAL	41,981 SF	ZONING		FRNT	155
Ngh	NO. SCITUATE	NOTE	. . . .		
Infl1	FACTOR 100				
Infl2	PHY 100				

ASSESSED	CURRENT	PREVIOUS
LAND	485,900	441,800
BUILDING	582,600	506,700
DETACHED	0	0
OTHER	0	0
TOTAL	**1,068,500**	**948,500**

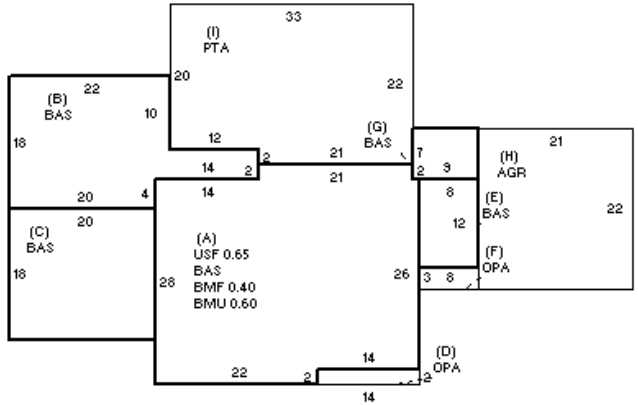

DETACHED

TY	QUAL	COND	DIM/NOTE	YB	UNITS	ADJ PRICE	RCNLD

PHOTO 11/11/2003

BLDG COMMENTS

BUILDING

BUILDING	CD	ADJ	DESC
MODEL	1		RESIDENTIAL
STYLE	4	1.10	CAPE [100%]
QUALITY	G	1.20	GOOD [100%]
FRAME	1	1.00	WOOD FRAME [100%]

MEASURE	4/21/2011	SJ
LIST	4/21/2011	EST
REVIEW	8/15/2023	JD

YEAR BLT	1966	SIZE ADJ	1.000
NET AREA	2,641	DETAIL ADJ	1.144
$NLA(RCN)	$306	OVERALL	1.000

CAPACITY	UNITS	ADJ
STORIES	1.65	1.00
ROOMS	9	1.00
BEDROOMS	4	1.00
BATHROOMS	2	1.00
# 1/2 BATHS	1	1.00
TOT FIXTURES	9	$9,884
# UNITS	1	1.00

ELEMENT	CD	DESCRIPTION	ADJ
FOUNDATION	4	CONT BSMT WALL	1.00
EXT COVER	1	WD SHINGLES	1.00
ROOF SHAPE	1	GABLE	1.00
ROOF COVER	1	ASPH SHINGLES	1.00
FLOOR COVER	24	COMB	1.00
INT FINISH	1	PLASTER	1.00
HEATING/COOLING	11	HW/COOL AIR	1.04
FUEL SOURCE	1	OIL	1.00

S	BAT	T	DESCRIPTION	UNITS	YB	ADJ PRICE	RCN
A	BMU	N	BSMT UNFINISHED	613		56.23	34,469
A	BMF	N	BSMT FINISH-SEP	409		78.93	32,284
A	USF	L	UPPER STORY FIN	664	1966	240.27	159,540
+	BAS	L	BASE AREA	1,977	1966	264.21	522,342
+	OPA	N	OPEN PORCH	52		61.80	3,214
H	AGR	N	ATT GARAGE	462		54.03	24,962
I	PTA	N	PATIO	702		17.88	12,552
	F21	O	FPL 2S 1OP	1		9,886.80	9,887

TOTAL RCN	809,134

CONDITION ELEM	CD
EXTERIOR	A
INTERIOR	G
KITCHEN	G
BATHS	G
HEAT	A
ELECT	A

EFF.YR/AGE	1977 / 45		
COND	28	28 %	
FUNC	0		
ECON	0		
DEPR	28	% GD	72
RCNLD			$582,600